website:http://biz.LGservice.com
e-mail:http://www.LGEservice.com/techsup.html

PLAZMA MONITOR
SERVICE MANUAL

CHASSIS : NP-00KA

MODEL : MT/MZ-60PZ10

CAUTION
BEFORE SERVICING THE CHASSIS,
READ THE SAFETY PRECAUTIONS IN THIS MANUAL.

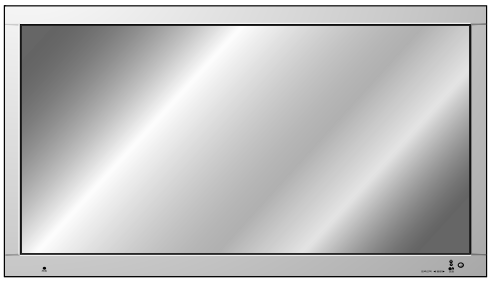

CONTENTS

Contents 2

Safety Precautions 3

Specifications 4

Control Descriptions 5

Adjustment Instructions 9

Trouble Shooting 11

Block Diagram 13

Wiring Diagram 15

Exploded View 16

Exploded View Parts List 17

Replacement Parts List 18

SVC. Sheet .....

SAFETY PRECAUTIONS

IMPORTANT SAFETY NOTICE

M a n ⚠ y
e l e c t r i
c a l
a n d
m e c h a n

General Guidance

p o s s
r e p a

A n **Isola**
t h e s e r
t h e A
a s
p e r s

I t w
d
i n a

I f
i

W h e n r
R e s i s

K e e p

D u e t o
e x t r e m e c
D o n o t

Leakage Current Cold Check(Antenna Cold Check)

W i t h
c o n n e c
P l a
o h m -
o h m -
a n t e n n a
I f t h
m e a
W h e n t h e
r e a
A n o t h
r e c e i

Leakage Current Hot Check (S e e

P l u g

Do not use a line Isolation Transformer during this check.

C o n n e c
b e t w e e n a
a
M e a
v o l t m
R e v e r s e p
v o l t a
v o l t a
c
I n c

Leakage Current Hot Check circuit

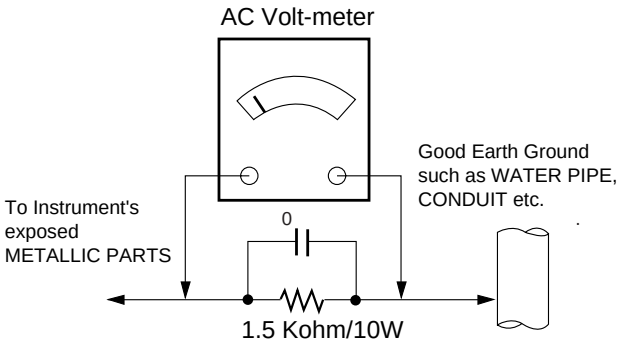

SPECIFICATIONS

Note : S p e c

- **Video receiving system:**
  P A L

  S E
  C
  A
  M

  N T S
  C
  -
  M

  N T S
  C
  4 . 4
  3

- **Input Voltage :**
  A
  C
  1
  1 0
  ~ 2
  4 0
  V ,
  5 0
  / 6
  0 H z (
  M T

				ld

Component Video Input

R			aP

RGB Input(PC/DTV)

PC

R			Pixel clock	aP

-

DTV

R	H-Freq(Khz)	V-Freq(hz)	Pixel clock	aP

CONTROLS DESCRIPTION

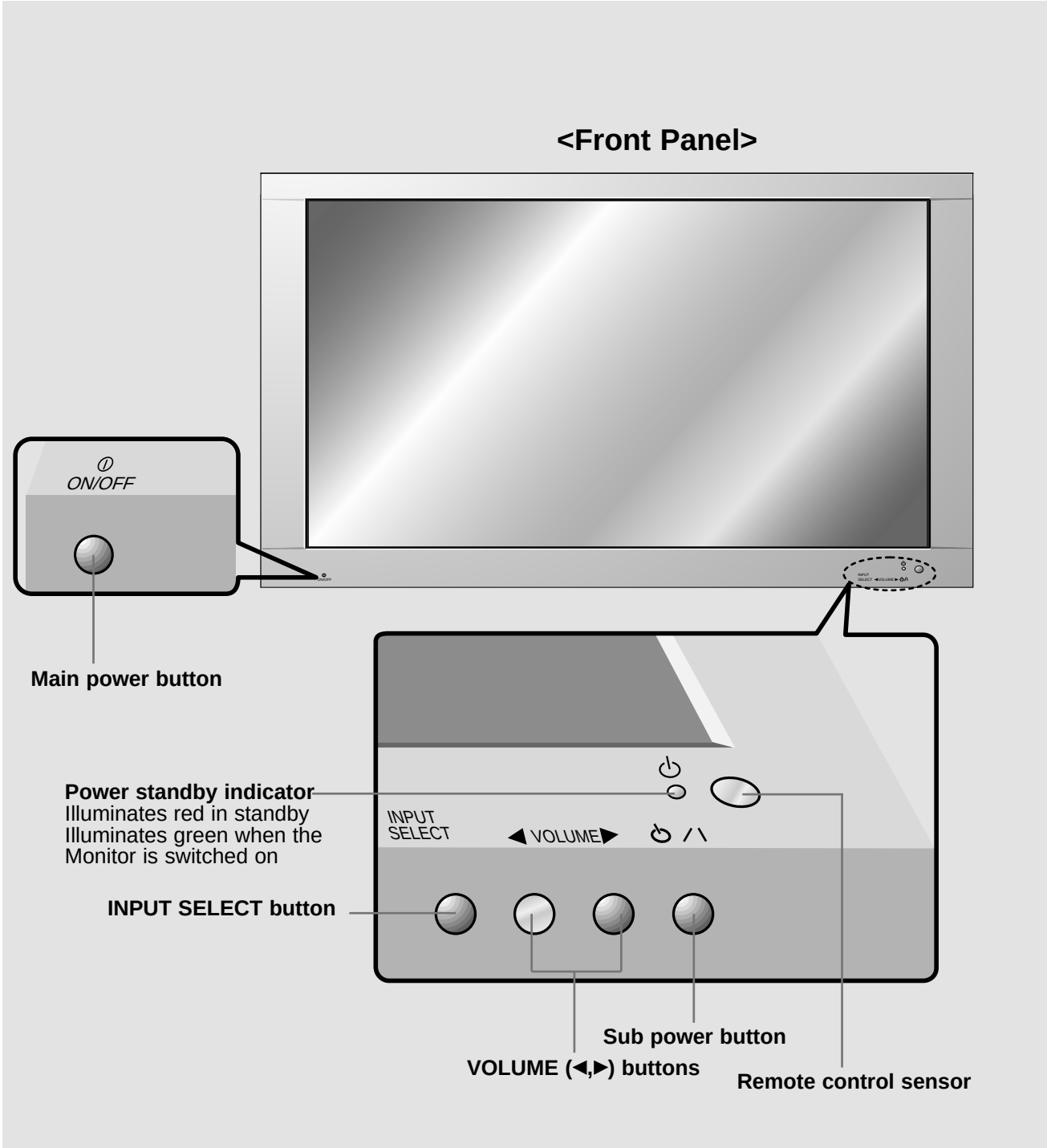

<Back Panel>

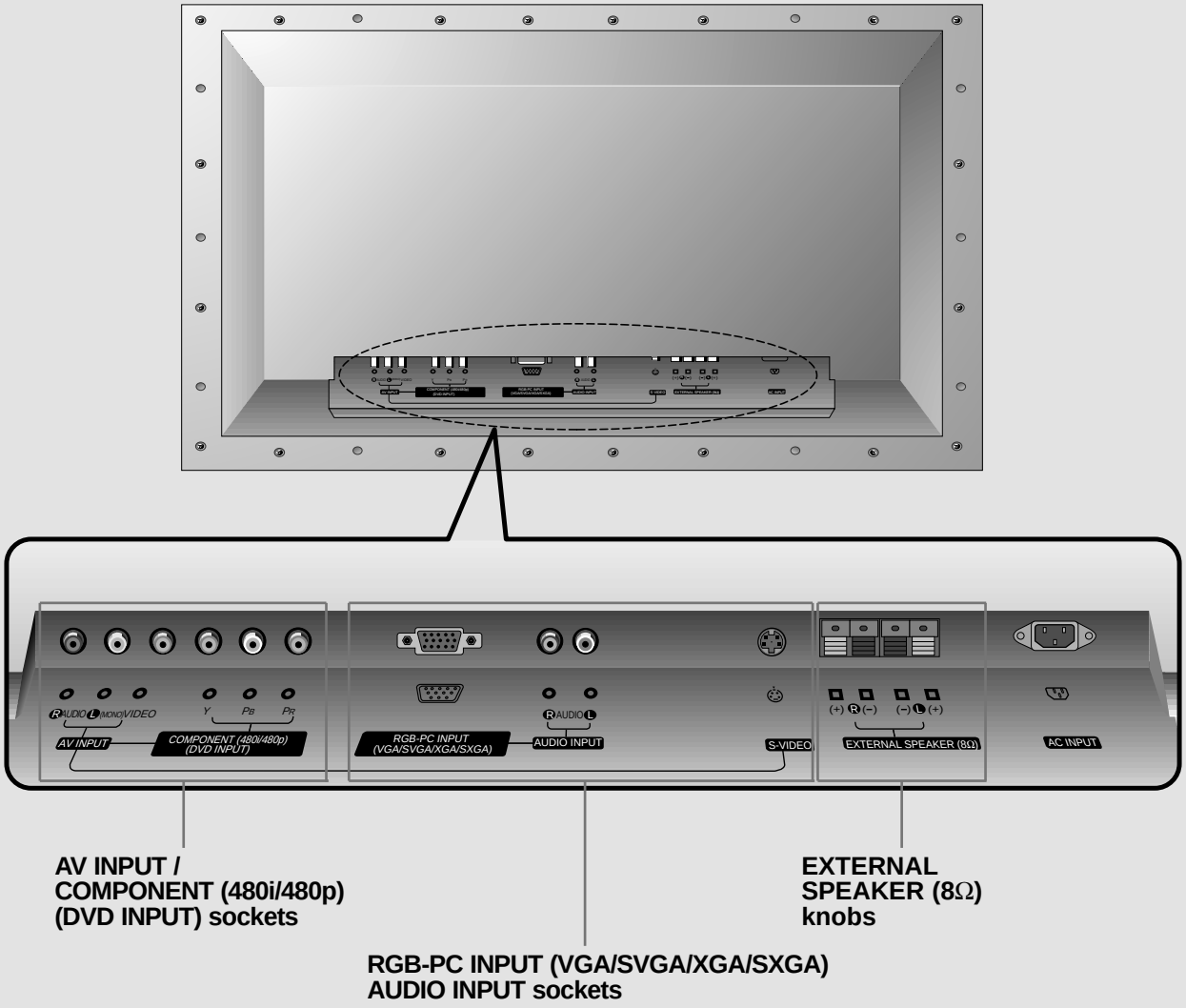

AV INPUT / COMPONENT (480i/480p) (DVD INPUT) sockets

RGB-PC INPUT (VGA/SVGA/XGA/SXGA) AUDIO INPUT sockets

EXTERNAL SPEAKER (8Ω) knobs

Optional Extras

- Optional extras can be changed or modified for quality improvement without any notification new optional extras can be added.
- Contract your dealer for buying these items.

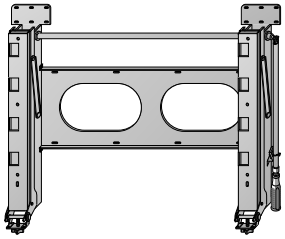

AP-60WA20M
(Tilt wall mounting bracket)

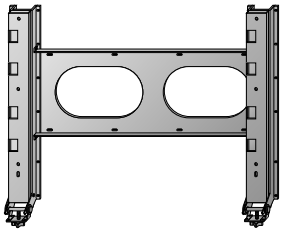

AP-60WA10
(Wall mounting bracket)

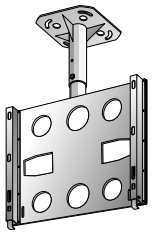

AP-60CA10 (Ceiling mounting bracket)

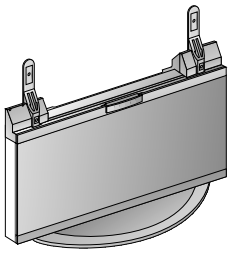

AP-60FA10 (Floor type stand)

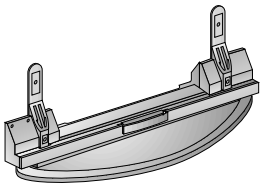

AP-60DA10 (Desktop stand)

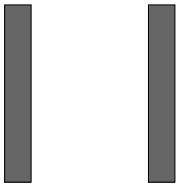

AP-60SA10 (Speakers)

AP-60SA10D
(Speaker stand)

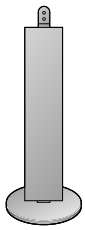

AP-60SA10F
(Floor type speaker stand)

Video cables

Audio cables

Controls of the remote control

- When using the remote control aim it at the remote control sensor of the Monitor.

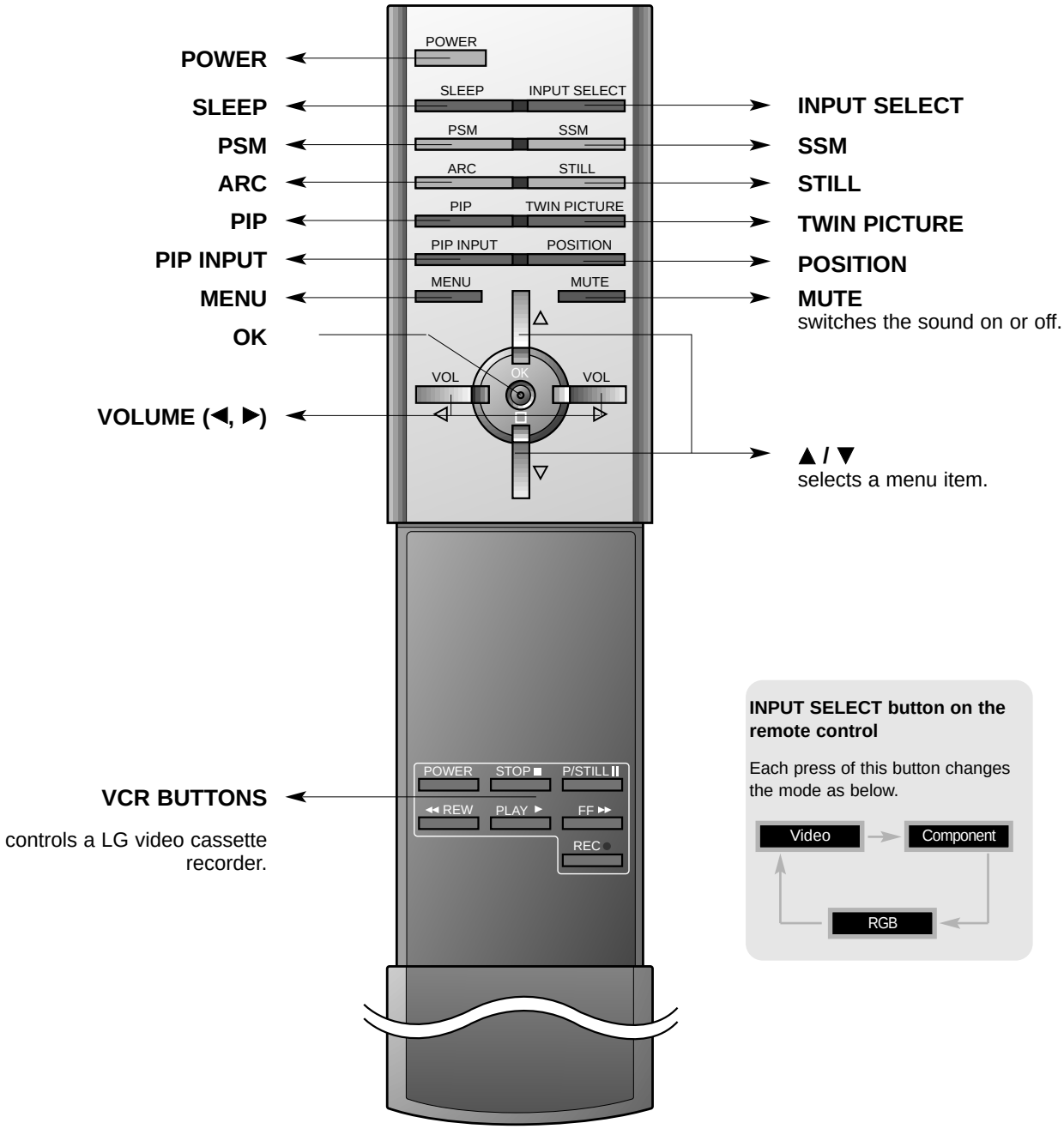

ADJUSTMENT INSTRUCTIONS

1. Application Object

These instructions are applied to all of the PDP monitor, NP-00KA.

2. Notes

(1) Because this is not a hot chassis, it is not necessary to use an isolation transformer. However, the use of isolation transformer will help protect test instrument.
(2) Adjustment must be done in the correct order.
(3) The adjustment must be performed in the circumstance of 25±5°C of temperature and 65±10% of relative humidity if there is no specific designation.
(4) The input voltage of the receiver must keep 110~240V, 50/60Hz in adjusting.
(5) The receiver must be operated for about 15 minutes prior to the adjustment.

¤ After receiving 100% white pattern(06CH), the receiver must be operate prior to adjustment.(Or white condition in HEAT-RUN mode)
¤Ł Enter into HEAT-RUN mode
- Select the 2.W/B by pressing ADJ button on Remote Control for adjustment. And press the VOL + button.
- Press the VOL + button in HEAT-RUN.
(OSD display HEAT-RUN WHITE and screen display 100% full WHITE PATTERN)
¤Ø Set is activated HEAT-RUN without signal generator in this mode.

※ Single color pattern of HEAT-RUN mode uses to check PANEL.(RED/BLUE/GREEN)

[Caution] *If you turn on a still screen more than 20 minutes, a afterinage may be occur in the black level part of the screen.*

3. POWER PCB Assy Voltage Adjustment

※ Replace PDP Module or Power Board, adjust certainly Power PCB Assy Voltage.

3-1. Test Equipment

D.M.M 1EA

3-2. Connection Diagram for Measuring

Refer to Fig 1.

3-3. Adjustment Method

(1) PFC Adjustment

¤ After receiving 100% white pattern, HEAT-RUN.
¤Ł Connect TP PFC+ and TP PFC-(GND) to D.M.M.
¤Ø Turning VR801, adjustment is 380V(±1V).

(2) Va Adjusment

¤ Connect pin 1 of P814 to (+) jack of D.M.M.
¤Ł After turning the VR803(Va Adj), voltage of D.M.M adjustment as same as Va voltage which on label of panel right/bottom.(Deviation : ±0.5V)

(3) Vs Adjustment

¤ Connect pin 9 of P803 to (+) jack of D.M.M.
¤Ł After turning the VR804(Vs Adj), voltage of D.M.M adjust as same as Vs voltage which indicated on label of panel right/bottom.(Deviation : ±0.5V)

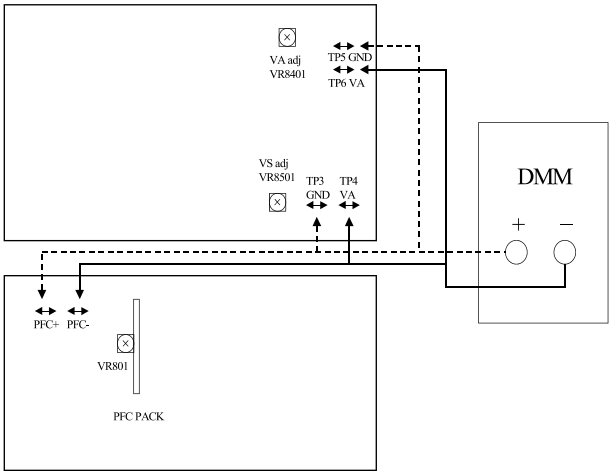

<Fig 1> Connection Diagram of Power Adjustment for Measuring

4. Adjustment White Balance

4-1. Required Equipment

Color analyzer(CA-100 or same production)

4-2. Connection Diagram of Equipment for Measuring

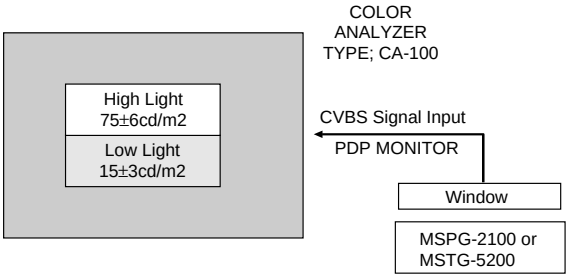

<Fig 2> Connection Diagram of Automatic Adjustment

※ After stop the Micom by pressing IN-START Key on Remote Control, insert the P1002 with automatic adjustment of connector.
After remove connector, move the Micom by pressing ENTER Key.

4-3. Adjustment of White Balance

- Operate the Zero-calibration of the CA—100, then stick sensor to PDP module surface when you adjust.
- For manual adjustment, it is also possible by the following sequence.

(1) Select WHITE PATTERN of HEAT RUN mode by pressing ADJ button on Remote Control for adjustment then operate HEAT RUN more than 15 minute.
(2) Supply 10 step gray scale bar signal in pattern generater. (A/V Input)
(3) To adjust Low Light, stick sensor to 9th pattern(Dark), select the W/B by pressing ADJ button on Remote Control for adjustment and press the VOL + button enter Adjustment Mode.
After select the G cut and B cut, press the VOL +/- Key and adjust it until color coordination becomes (R cut fixation)
color coordination : X=0.280±0.005, Y=0.310±0.005
color temperature : 8.800˚K ± 500˚K
(4) To adjust High Light, stick sensor to 2th pattern(White), select the W/B by pressing ADJ button on Remote Control for adjustment and press the VOL + button enter Adjustment Mode.
After select the R GAIN and G GAIN, press the VOL +/- Key and adjust it until color coordination becomes (B GAIN fixation)
color coordination : X=0.280±0.005, Y=0.310±0.005
color temperature : 8.800˚K ± 500˚K
(5) Confirm the result of the High Light adjustment.
If the deviation of High Light occur, operate the adjustment of Low Light and High Light again.
(6) Exit adjustment mode using Enter button.

TROUBLESHOOTING

1. No Video

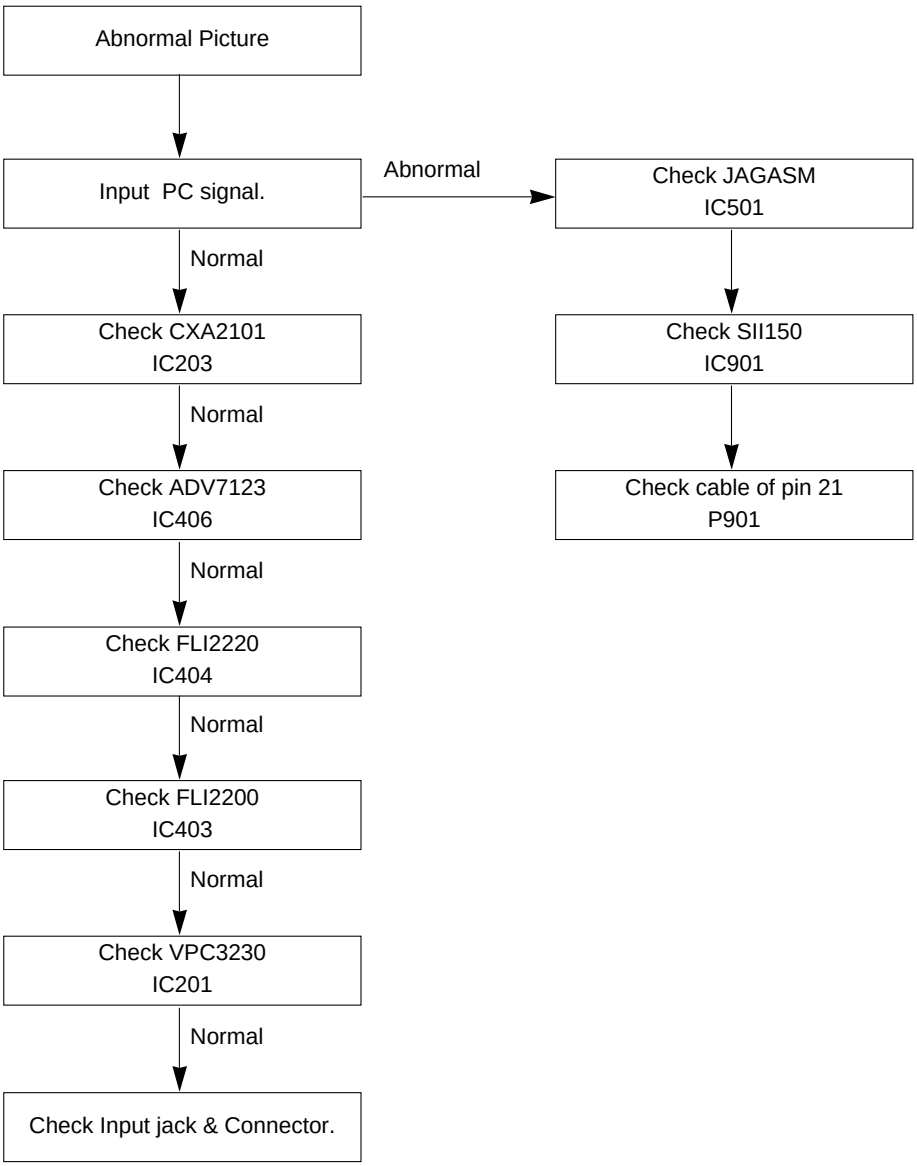

2. No Sound

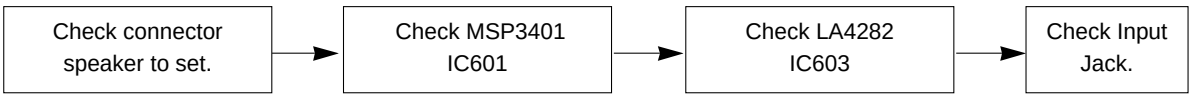

3. No Video

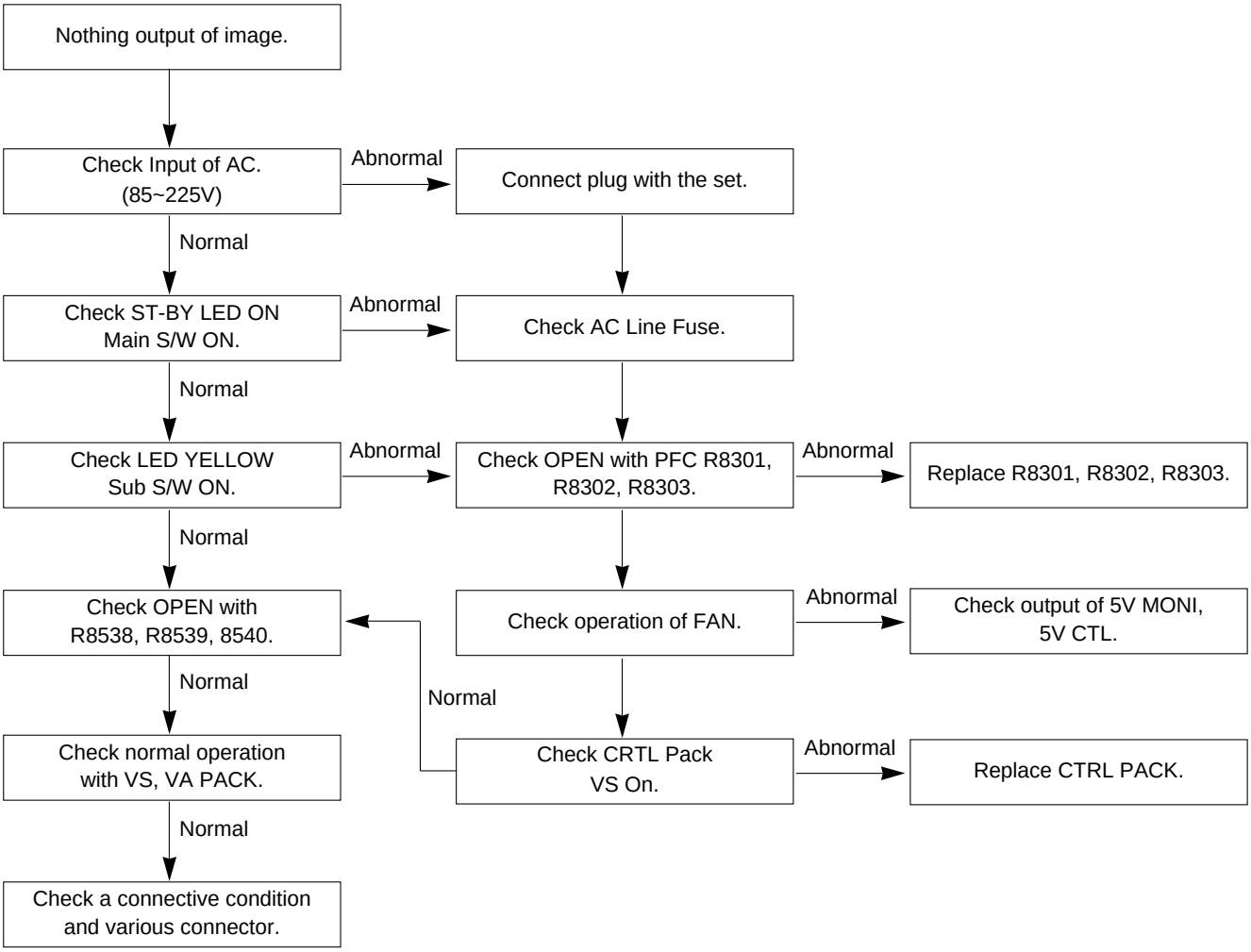

4. No Sound

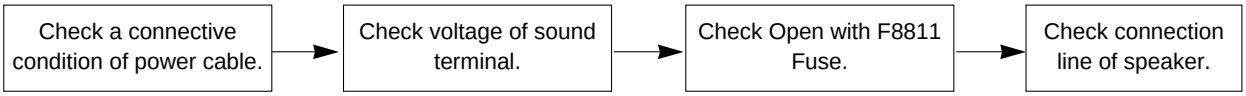

BLOCK DIAGRAM

1. VSC Board

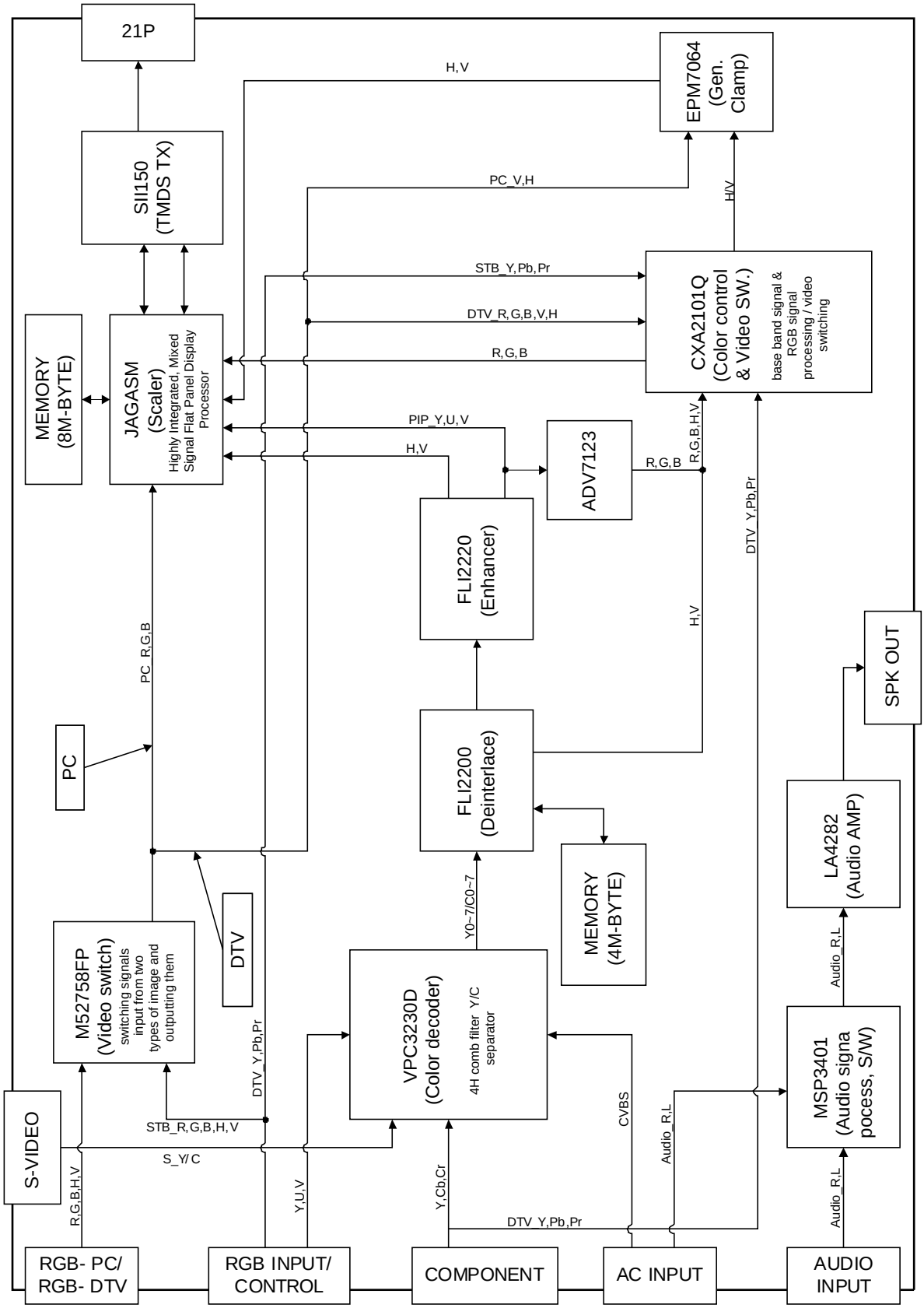

2. POWER Board

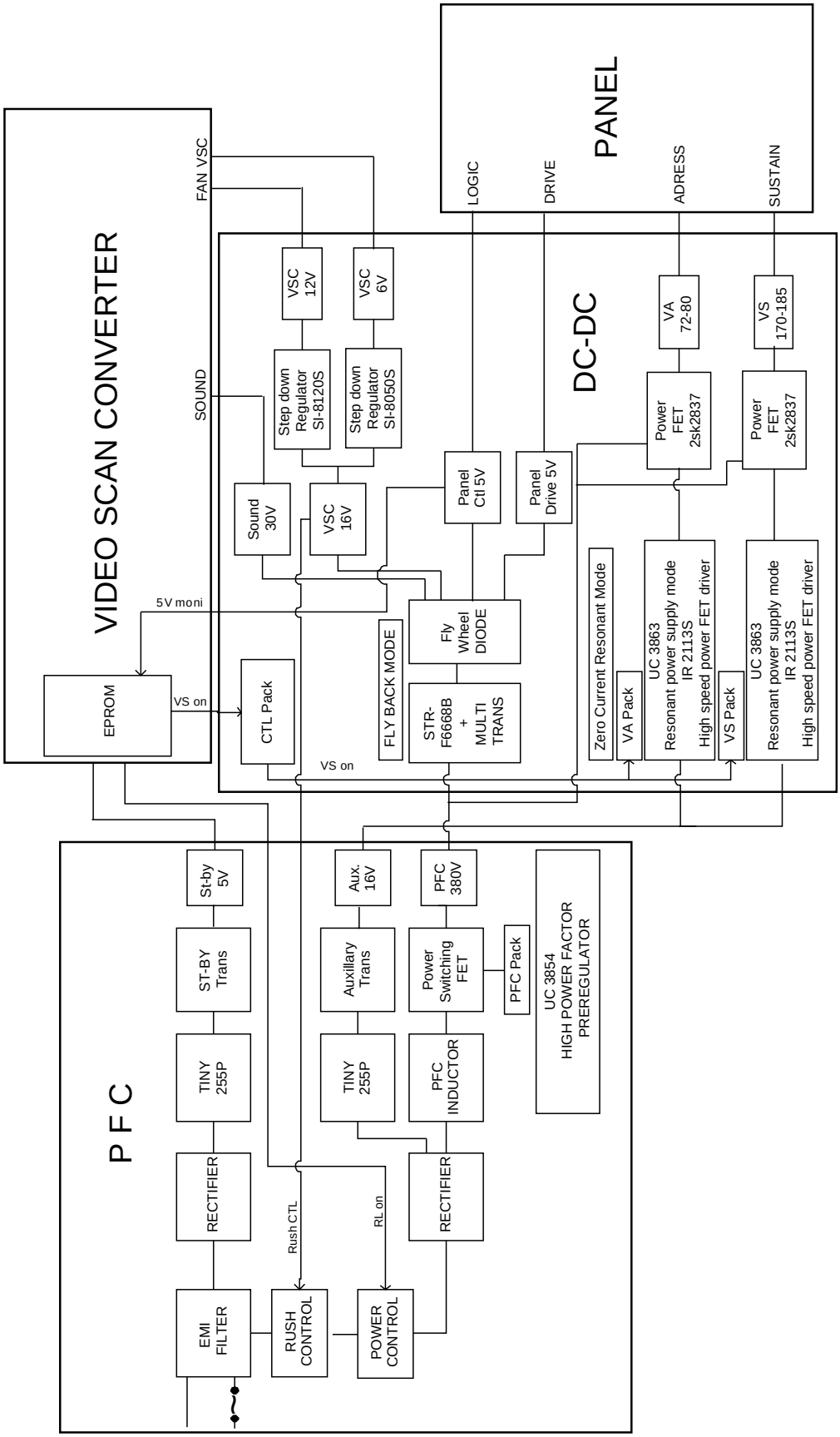

Wiring Diagram

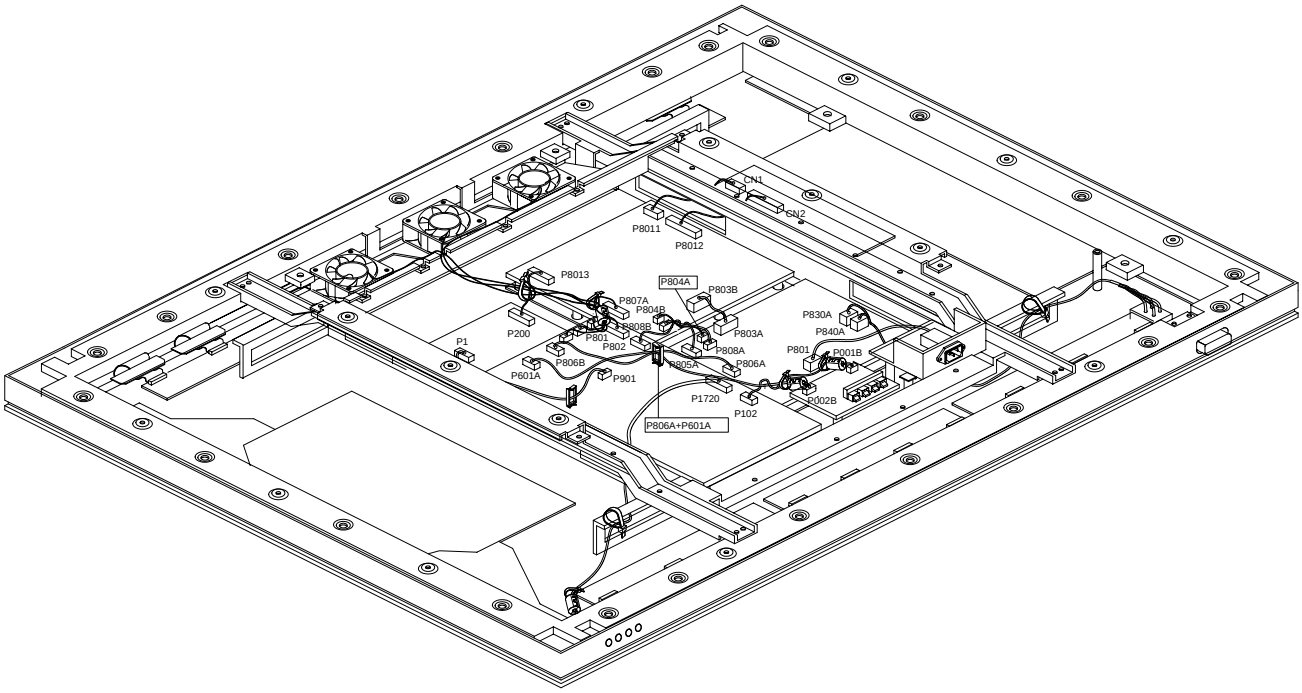

EXPLODED VIEW

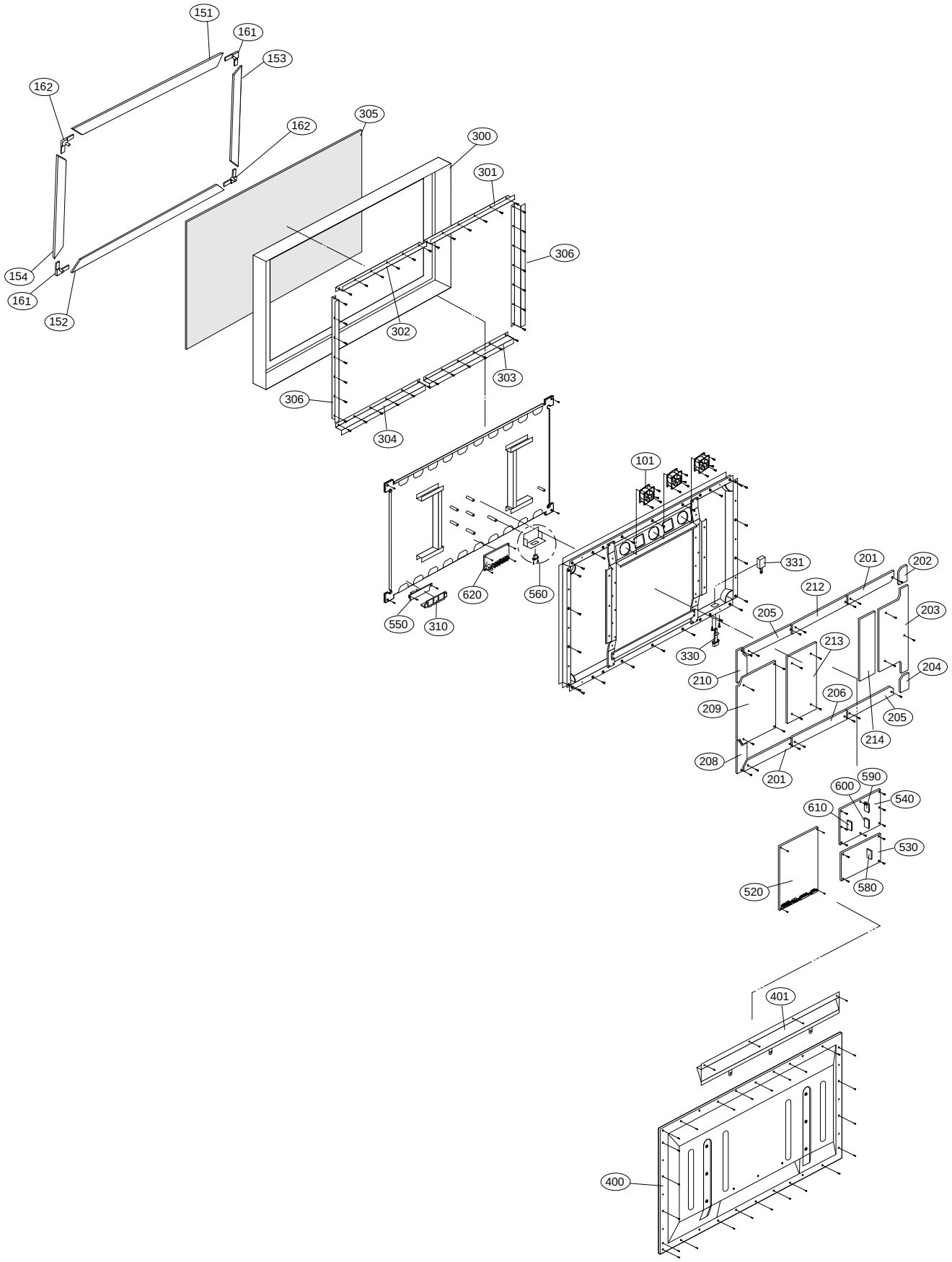

EXPLODED VIEW PARTS LIST

No.	Part No.	Description
101	5900V08004A	FAN,DC F8025L12B2-RG DONG YANG 80MM 12V 120MA 2300RPM 79G L 300MM
151	3210V00054C	FRAME, FRONT TOP MP-60PZ10, MT-60PZ10, MZ-60PZ10”
152	3210V00055C	FRAME, FRONT TOP MP-60PZ10, MT-60PZ10, MZ-60PZ10”
153	3210V00056A	FRAME, FRONT RIGHT FD-60X3 .
154	3210V00057A	FRAME, FRONT LEFT FD-60X3 .
161	4972V00016B	FIXER, MAIN FRAME FD-60X3
162	4972V00016A	FIXER, MAIN FRAME FD-60X3
200	6348Q-B031D	PDP, 60” 16:9 1280*720 FOR DND INTERCOMPANY
201	6871QRH006A	PWB(PCB) ASSEMBLY, XRRT ASSY HAND INSERT B21 2 LAYER
202	6871QTH016A	PWB(PCB) ASSEMBLY, ZCNT ASSY HAND INSERT B21 2 LAYER(TOP)
203	6871QZH010A	PWB(PCB) ASSEMBLY, ZSUS ASSY HAND INSERT B21 2 LAYER
204	6871QTH017A	PWB(PCB) ASSEMBLY,ZCNT ASSY HAND INSERT B21 2 LAYER(BOTTOM)
205	6871QLH008A	PWB(PCB) ASSEMBLY, XRLT ASSY HAND INSERT B21 2 LAYER
206	6871QXH005A	PWB(PCB) ASSEMBLY, XRCT ASSY HAND INSERT B21 2 LAYER CENTER BOTTOM
208	6871QDH024B	PWB(PCB) ASSEMBLY,DISPLAY YDRV ASSY HAND INSERT 60HD3(BOTTOM)
209	6871QYH016A	PWB(PCB) ASSEMBLY,DISPLAY YSUS ASSY HAND INSERT B22(60HD3) 4 LAYER VERSION_03
210	6871QDH023B	PWB(PCB) ASSEMBLY,DISPLAY YDRV ASSY HAND INSERT 60HD3(TOP)
212	6871QXH004A	PWB(PCB) ASSEMBLY, XRCT ASSY HAND INSERT B21 2 LAYER CENTER TOP
213	6871QCP009A	PWB(PCB) ASSEMBLY, CTRL ASSY SMD TOP INSERT B21 2LAYER(245 X 329)
214	6871QPH001A	PWB(PCB) ASSEMBLY, DCDC ASSY HAND INSERT B MODEL
300	3091V00352A	CABINET ASSEMBLY, MJ-60PZ12V STEREO NP00KB SET
301	4980V00142A	SUPPORTER, FILTER AL5052 NONE
302	4980V00142B	SUPPORTER, FILTER AL5052 NONE
303	4980V00143B	SUPPORTER, FILTER AL5052 NONE
304	4980V00143A	SUPPORTER, FILTER AL5052 NONE
305	3790V00267B	FILTER(MECH), H04PR-LGE60-02 FD60X3R FIBER MESH NBK
306	4980V00141A	SUPPORTER, FILTER AL5052 NONE
310	5020V00437A	BUTTON, 4KEY FD- 60X3 .
330	5020V00436A	BUTTON, FD- 60X3 .
331	6600VM2006B	SWITCH,PUSH POSTEC UNIVERSAL 250V 4A VERTICAL .G
400	3809V00280A	BACK COVER ASSEMBLY, MN-60PZ10 NON
401	3300V00067D	PLATE, REAR A/V MT,MZ-60PZ10
520	6871VMM693B	PWB(PCB) ASSEMBLY,MAIN NP00KA PAL MZ/MT
530	6871VPM052A	PWB(PCB) ASSEMBLY,MAIN SMPS NP-00KA/B PFC
540	6871VPM054A	PWB(PCB) ASSEMBLY,MAIN SMPS NP-00KA/B POWER
550	6871VSM677A	PWB(PCB) ASSEMBLY,MAIN CONT NP00KA CONTROL
560	3141VSN195B	CHASSIS ASSEMBLY, SUB NP00KB LINEFILTER ASSY
580	6871VSMB46A	PWB(PCB) ASSEMBLY,SUB NP-00KB VER.2 PFC PACK
590	6871VSM668A	PWB(PCB) ASSEMBLY,MAIN POWER NP-00KA VA M/I
600	6871VSM669A	PWB(PCB) ASSEMBLY,MAIN POWER NP-00KA VS M/I
610	6871VSM670A	PWB(PCB) ASSEMBLY,MAIN POWER NP-00KA CONTROL
620	6871VSM676A	PWB(PCB) ASSEMBLY,MAIN A/V NP00KA SIDE A/V

REPLACEMENT PARTS LIST

LOCA. NO	PART NO	DESCRIPTION
IC		
IC101	0IAL242110A	AT24C21-10SI-2.5 8P,SOP TP 1K
IC102	0IMCRMI006A	M52758FP MITSUBISHI 36PIN, R/T
IC103	0ISH052100C	PQ05RD21 4SIP ST REGULATOR
IC104	0IMO741230E	SN74LS123D 14P,SOP TP MONO MUL
IC201	0IIT323000C	VPC3230D-QA-B3 80P PQFP BK COM
IC202	0IKE704200J	KIA7042AF SOT-89 TP 4.2V VOLTA
IC203	0ISO210100B	CXA2101AQ 80P,QFP BK VIDEO SIG
IC204	0IKE780900M	KIA7809API TO220 ST 3P 9V REGU
IC205	0ISH052100C	PQ05RD21 4SIP ST REGULATOR
IC402	0ISS464323A	K4S643232E(C)-TC/L70(KM432S203
IC403	0IMCRG2001A	FLI2200 SAGE 176P,QFP TRAY VID
IC404	0IMCRG2002A	FLI2220 SAGE 160P,QFP TRAY DIG
IC406	0IMCRAD001A	ADV7123KSTC140 ANALOG DEVICE 4
IC501	0IMCRG2004A	JAGASM SAGE 352BALL TRAY HIGHL
IC502	0ISS464323A	K4S643232E(C)-TC/L70(KM432S203
IC503	0ISS464323A	K4S643232E(C)-TC/L70(KM432S203
IC601	0IIT340110A	MSP3401G-QA-A1 80 ST SOUND PRO
IC602	0IKE704200J	KIA7042AF SOT-89 TP 4.2V VOLTA
IC603	0ISA428200A	LA4282 12S 2CHX10W AUDIO AMP
IC8806	0ISK812011A	SI-8120S(LF1113) 5PIN BK 12V R
IC604	0ISH052100C	PQ05RD21 4SIP ST REGULATOR
IC605	0IKE780800A	KIA7808PI 3P(TO-220IS) 1A,8V -
IC701	0IMI623200B	M62320FP,I/O EXPANDER 16P SOP
IC702	0IMI623200B	M62320FP,I/O EXPANDER 16P SOP
IC703	0IMI623200B	M62320FP,I/O EXPANDER 16P SOP
IC704	0IAL241610A	AT24C16N-10SI 8P SOIC ST EEPRO
IC706	0IMCRNS001A	LM810 NATIONAL SEMICONDUCTOR 3
IC707	0IPH740400G	74HC04D HEX INVERTER 14P,SOP T
IC708	0IPH806520A	80C652 40 PLCC ST 8-BIT MICROC
IC709	0IZZVA0030A	AT27C020 32PIN DIP
IC710	0IPH743730E	74HCT373D 20SOP R/TP ADDRESS L
IC801	0IUN385400B	UC3854BDW 20PLCC R/TP PFC CONT
IC802	0IMCRRH001A	BA033FP ROHM 3P-SOP,TO252-3 R/
IC803	0ILT176425A	LT1764EQ-2.5 5PIN Q PACKAGE R
IC804	0IMCRRH001A	BA033FP ROHM 3P-SOP,TO252-3 R/
IC806	0IMCRRH001A	BA033FP ROHM 3P-SOP,TO252-3 R/
IC807	0ILT176425A	LT1764EQ-2.5 5PIN Q PACKAGE R
IC808	0IPH743200A	74HC32D 14SOP TP QUAD 2-INPUT
IC901	0IS5150000A	SII150 100QFP BK PANEL LINK TR
IC1001	0IFA754207A	KA75420ZTA(KA7542ZTA) 3P,TO-92
IC1002	0IFA754207A	KA75420ZTA(KA7542ZTA) 3P,TO-92
IC1003	0IPH827150A	P82B715T 8SOP R/TP IIC EXTENDE
IC1101	0IMCRAT003A	EPM7064STC44-100 ALTERA 44P,QF
IC1102	0ISH052100C	PQ05RD21 4SIP ST REGULATOR
IC8102	0IIR121130A	1R2113S 16SOP R/TP H/BRIDGE DR
IC8103	0IRH103392A	BA10339FV-E2 SSOP-B14PIN R/TP
IC8104	0ISH121100D	PQ12DZ1U 5 SMD R/TP REGULATOR

LOCA. NO	PART NO	DESCRIPTION
IC8131	0IUN386300B	UC3863DW 20PLCC R/TP PFZO CONT
IC8201	0IPF255000A	TNY255P 8DIP ST LOW POWER OFF-
IC8202	0IPF255000A	TNY255P 8DIP ST LOW POWER OFF-
IC8204	0ITI431000D	TL431ILP LP003 VAR.ZENER
IC8205	0IKE781200P	KIA7812API TO220 ST 3P 12V REG
IC8602	0IIR121130A	1R2113S 16SOP R/TP H/BRIDGE DR
IC8603	0IRH103392A	BA10339FV-E2 SSOP-B14PIN R/TP
IC8604	0ISH121100D	PQ12DZ1U 5 SMD R/TP REGULATOR
IC8631	0IUN386300B	UC3863DW 20PLCC R/TP PFZO CONT
IC8801	0ISK666813A	STR-F6668B(LF1352) 5PIN BK STR
IC8802	0ISK005000A	SE005N 3P TO-220 BK 5V ERROR A
IC8803	0IFA754207A	KA75420ZTA(KA7542ZTA) 3P,TO-92
IC8804	0ISK805011A	SI-8050S(LF1113) 5PIN BK 5V RE
IC8900	0ISH817300B	PC817XF3 4D PHOTO COUPLER
PC8201	0ILI817000G	LTV817M-VB 4P,DIP BK PHOTO COU
PC8202	0ILI817000G	LTV817M-VB 4P,DIP BK PHOTO COU
PC8401	0ILI817000G	LTV817M-VB 4P,DIP BK PHOTO COU
PC8402	0ILI817000G	LTV817M-VB 4P,DIP BK PHOTO COU
PC8403	0ILI817000G	LTV817M-VB 4P,DIP BK PHOTO COU
PC8501	0ILI817000G	LTV817M-VB 4P,DIP BK PHOTO COU
PC8502	0ISH851000A	PC851 4P,DIP BK HIGH VOLTAGE P
PC8503	0ILI817000G	LTV817M-VB 4P,DIP BK PHOTO COU
PC8504	0ILI817000G	LTV817M-VB 4P,DIP BK PHOTO COU
PC8801	0ILI817000G	LTV817M-VB 4P,DIP BK PHOTO COU
PC8802	0ILI817000G	LTV817M-VB 4P,DIP BK PHOTO COU
TRANSISTOR		
Q001	0TR103009AD	KRC103M(AT) TO-92M TP KEC
Q002	0TR103009AD	KRC103M(AT) TO-92M TP KEC
Q101	0TR387500AA	CHIP 2SC3875S(ALY) KEC
Q102	0TR387500AA	CHIP 2SC3875S(ALY) KEC
Q103	0TR387500AA	CHIP 2SC3875S(ALY) KEC
Q104	0TR387500AA	CHIP 2SC3875S(ALY) KEC
Q105	0TR387500AA	CHIP 2SC3875S(ALY) KEC
Q106	0TR387500AA	CHIP 2SC3875S(ALY) KEC
Q107	0TR387500AA	CHIP 2SC3875S(ALY) KEC
Q108	0TR387500AA	CHIP 2SC3875S(ALY) KEC
Q109	0TR387500AA	CHIP 2SC3875S(ALY) KEC
Q110	0TR387500AA	CHIP 2SC3875S(ALY) KEC
Q111	0TR387500AA	CHIP 2SC3875S(ALY) KEC
Q112	0TR387500AA	CHIP 2SC3875S(ALY) KEC
Q113	0TR387500AA	CHIP 2SC3875S(ALY) KEC
Q114	0TR387500AA	CHIP 2SC3875S(ALY) KEC
Q115	0TR387500AA	CHIP 2SC3875S(ALY) KEC
Q116	0TR387500AA	CHIP 2SC3875S(ALY) KEC
Q121	0TR104009AF	CHIP KRC104S SOT-23 TP KEC
Q250	0TR150400BA	CHIP 2SA1504S(ASY) KEC
Q251	0TR150400BA	CHIP 2SA1504S(ASY) KEC
Q252	0TR150400BA	CHIP 2SA1504S(ASY) KEC

LOCA. NO	PART NO	DESCRIPTION
Q301	0TR387500AA	CHIP 2SC3875S(ALY) KEC
Q302	0TR387500AA	CHIP 2SC3875S(ALY) KEC
Q303	0TR150400BA	CHIP 2SA1504S(ASY) KEC
Q304	0TR387500AA	CHIP 2SC3875S(ALY) KEC
Q404	0TR150400BA	CHIP 2SA1504S(ASY) KEC
Q405	0TR150400BA	CHIP 2SA1504S(ASY) KEC
Q406	0TR150400BA	CHIP 2SA1504S(ASY) KEC
Q601	0TR150400BA	CHIP 2SA1504S(ASY) KEC
Q602	0TR150400BA	CHIP 2SA1504S(ASY) KEC
Q603	0TR150400BA	CHIP 2SA1504S(ASY) KEC
Q801	0TR387500AA	CHIP 2SC3875S(ALY) KEC
Q802	0TR176608AA	2SD1766Q R/TP ROHM KOREA SMD F
Q803	0TR387500AA	CHIP 2SC3875S(ALY) KEC
Q804	0TR118008AA	2SB1188Q R/TP ROHM KOREA SMD F
Q806	0TR387500AA	CHIP 2SC3875S(ALY) KEC
Q808	0TR387500AA	CHIP 2SC3875S(ALY) KEC
Q1001	0TR387500AA	CHIP 2SC3875S(ALY) KEC
Q1002	0TR387500AA	CHIP 2SC3875S(ALY) KEC
Q1003	0TR387500AA	CHIP 2SC3875S(ALY) KEC
Q1004	0TR387500AA	CHIP 2SC3875S(ALY) KEC
Q1005	0TR387500AA	CHIP 2SC3875S(ALY) KEC
Q1006	0TR387500AA	CHIP 2SC3875S(ALY) KEC
Q1007	0TR387500AA	CHIP 2SC3875S(ALY) KEC
Q1008	0TR387500AA	CHIP 2SC3875S(ALY) KEC
Q1009	0TR387500AA	CHIP 2SC3875S(ALY) KEC
Q1010	0TR387500AA	CHIP 2SC3875S(ALY) KEC
Q1012	0TR387500AA	CHIP 2SC3875S(ALY) KEC
Q7105	0TR387500AA	CHIP 2SC3875S(ALY) KEC
Q7107	0TR387500AA	CHIP 2SC3875S(ALY) KEC
Q8101	0TR150400BA	CHIP 2SA1504S(ASY) KEC
Q8102	0TR150400BA	CHIP 2SA1504S(ASY) KEC
Q8104	0TR150400BA	CHIP 2SA1504S(ASY) KEC
Q8105	0TR387500AA	CHIP 2SC3875S(ALY) KEC
Q8106	0TR102009AG	CHIP KRC102S SOT-23 TP KEC
Q8107	0TR150400BA	CHIP 2SA1504S(ASY) KEC
Q8108	0TR387500AA	CHIP 2SC3875S(ALY) KEC
Q8201	0TR319809AA	KTC3198 TP KEC - - -Y (KTC1815
Q8203	0TR102009AB	KRC102M,TP(KRC1202),KEC
Q8204	0TR319809AA	KTC3198 TP KEC - - -Y (KTC1815
Q8205	0TR102009AB	KRC102M,TP(KRC1202),KEC
Q8206	0TR319809AA	KTC3198 TP KEC - - -Y (KTC1815
Q8207	0TR322709AA	KTC3227-Y,TP(KTC1627A),KEC
Q8208	0TR322709AA	KTC3227-Y,TP(KTC1627A),KEC
Q8210	0TR319809AA	KTC3198 TP KEC - - -Y (KTC1815
Q8303	0TFIR10001A	INTERNATIONAL RECTIFIER IRFPS3
Q8304	0TFIR10001A	INTERNATIONAL RECTIFIER IRFPS3
Q8401	0TF283700AA	2SK2837 BK TOSHIBA 500V 20A TO
Q8402	0TF283700AA	2SK2837 BK TOSHIBA 500V 20A TO
Q8403	0TR322709AA	KTC3227-Y,TP(KTC1627A),KEC
Q8501	0TF283700AA	2SK2837 BK TOSHIBA 500V 20A TO
Q8502	0TF283700AA	2SK2837 BK TOSHIBA 500V 20A TO
Q8503	0TF283700AA	2SK2837 BK TOSHIBA 500V 20A TO

LOCA. NO	PART NO	DESCRIPTION
Q8505	0TR322709AA	KTC3227-Y,TP(KTC1627A),KEC
Q8601	0TR150400BA	CHIP 2SA1504S(ASY) KEC
Q8602	0TR150400BA	CHIP 2SA1504S(ASY) KEC
Q8604	0TR150400BA	CHIP 2SA1504S(ASY) KEC
Q8605	0TR387500AA	CHIP 2SC3875S(ALY) KEC
Q8606	0TR102009AG	CHIP KRC102S SOT-23 TP KEC
Q8607	0TR150400BA	CHIP 2SA1504S(ASY) KEC
Q8608	0TR387500AA	CHIP 2SC3875S(ALY) KEC
Q8801	0TR385200AA	2SC3852A SANKEN
Q8802	0TR319809AA	KTC3198 TP KEC - - -Y (KTC1815
Q8803	0TR319809AA	KTC3198 TP KEC - - -Y (KTC1815
Q8900	0TR387500AA	CHIP 2SC3875S(ALY) KEC
Q8901	0TR387500AA	CHIP 2SC3875S(ALY) KEC
Q8902	0TR387500AA	CHIP 2SC3875S(ALY) KEC
Q8903	0TR387500AA	CHIP 2SC3875S(ALY) KEC
Q8904	0TR387500AA	CHIP 2SC3875S(ALY) KEC
Q8905	0TR102009AG	CHIP KRC102S SOT-23 TP KEC
Q8906	0TR102009AG	CHIP KRC102S SOT-23 TP KEC
Q8907	0TR387500AA	CHIP 2SC3875S(ALY) KEC
Q8908	0TR150400BA	CHIP 2SA1504S(ASY) KEC
Q8909	0TR102009AG	CHIP KRC102S SOT-23 TP KEC
DIODE		
D101	0DD226239AA	CHIP KDS226 SOT-23
D102	0DD226239AA	CHIP KDS226 SOT-23
D103	0DD226239AA	CHIP KDS226 SOT-23
D104	0DD226239AA	CHIP KDS226 SOT-23
D105	0DD226239AA	CHIP KDS226 SOT-23
D106	0DD226239AA	CHIP KDS226 SOT-23
D250	0DD226239AA	CHIP KDS226 SOT-23
D251	0DD226239AA	CHIP KDS226 SOT-23
D252	0DD184009AA	KDS184S CHIP 85V 300MA KEC TP
D401	0DL233309AC	LED,SAM2333 TP KWANG GREEN/RED GRE
D402	0DL233309AC	LED,SAM2333 TP KWANG GREEN/RED GRE
D601	0DD184009AA	KDS184S CHIP 85V 300MA KEC TP
D602	0DD184009AA	KDS184S CHIP 85V 300MA KEC TP
D603	0DD184009AA	KDS184S CHIP 85V 300MA KEC TP
D604	0DD226239AA	CHIP KDS226 SOT-23
D610	0DD226239AA	CHIP KDS226 SOT-23
D801	0DZ240009CG	ZENERS,MTZJ24B
D802	0DD100009AM	EU1ZV(1) TP SANKEN
D802	0DZ910009AJ	ZENERS,MTZJ9.1B
D803	0DZ750009AG	ZENERS,MTZJ7.5B
D804	0DZ240009CG	ZENERS,MTZJ24B
D805	0DD120000BB	FML-G12S
D807	0DZRM00178A	ZENERS,UDZS TE-17 5.1B ROHM R/TP SMD
D1001	0DD226239AA	CHIP KDS226 SOT-23
D1002	0DD226239AA	CHIP KDS226 SOT-23
D1003	0DD226239AA	CHIP KDS226 SOT-23
D1004	0DD226239AA	CHIP KDS226 SOT-23
D1101	0DD226239AA	CHIP KDS226 SOT-23
D8101	0DZ620009BB	ZENERS,MTZJ6.2B

For Capacitor & Resistors, the charactors at 2nd and 3rd digit in the P/No. means as follows;	CC, CX, CK, CN : Ceramic CQ : Polyestor CE : Electrolytic	RD : Carbon Film RS : Metal Oxide Film RN : Metal Film RF : Fusible

LOCA. NO	PART NO	DESCRIPTION
D8102	0DR011009AA	EG01AV1 TP SANKEN NON 600V 0.5
D8104	0DD184009AA	KDS184S CHIP 85V 300MA KEC TP
D8105	0DD184009AA	KDS184S CHIP 85V 300MA KEC TP
D8202	0DD414809ED	1N4148 TA
D8203	0DD260000BB	BRIDGE D2SBA60(STK) SHINDENKEN
D8204	0DD110009DB	RM11CV(1) TP SANKEN TP SANKEN
D8205	0DD100009AP	EG1ZV(1) TP SANKEN TP SANKEN
D8206	0DD120000BB	FML-G12S
D8208	0DD100009DK	RU1P V(1) TP SANKEN
D8210	0DZ160009BC	ZENERS,MTZJ16B
D8211	0DZ180009AG	ZENERS,MTZJ18B
D8212	0DD100009DK	RU1P V(1) TP SANKEN
D8213	0DD100009AP	EG1ZV(1) TP SANKEN TP SANKEN
D8214	0DZ680009BB	ZENERS,MTZJ6.8B
D8215	0DZ300009BB	ZENERS,MTZJ30B
D8216	0DZ300009BB	ZENERS,MTZJ30B
D8217	0DZ750009AG	ZENERS,MTZJ7.5B
D8301	0DD414809ED	1N4148 TA
D8302	0DD414809ED	1N4148 TA
D8303	0DB250600AB	RBV-2506 BK SANKEN - 600V 25A
D8304	0DR310000BA	RM3A LF-U1 BK SANKEN - 600V 2.
D8305	0DR310000BA	RM3A LF-U1 BK SANKEN - 600V 2.
D8306	0DD410009AA	SCHOTTKY,BAT 41 TP
D8307	0DD410009AA	SCHOTTKY,BAT 41 TP
D8311	0DR360000BA	FMB-36M BK SANKEN - 0.62V - -
D8312	0DD100009AP	EG1ZV(1) TP SANKEN TP SANKEN
D8313	0DZ680009BB	ZENERS,MTZJ6.8B
D8315	0DZ620009BD	ZENER,P6KE200A
D8316	0DZ620009BD	ZENER,P6KE200A
D8319	0DD410009AA	SCHOTTKY,BAT 41 TP
D8401	0DD100009AP	EG1ZV(1) TP SANKEN TP SANKEN
D8402	0DD414809ED	1N4148 TA
D8403	0DD414809ED	1N4148 TA
D8404	0DR240000BA	FML-24S BK SANKEN TO220 400V 1
D8405	0DZ330009BA	ZENER,HZT33(TP) HITACHI
D8406	0DZ330009BA	ZENER,HZT33(TP) HITACHI
D8407	0DD100009AP	EG1ZV(1) TP SANKEN TP SANKEN
D8408	0DZ120009AF	ZENERS,MTZJ12B
D8409	0DZ680009BB	ZENERS,MTZJ6.8B
D8411	0DZ360009BC	ZENERS,MTZJ3.6B
D8412	0DZ330009BA	ZENER,HZT33(TP) HITACHI
D8414	0DR220000CA	FMM-22S BK SANKEN TO220 200V 1
D8418	0DD414809ED	1N4148 TA
D8419	0DZ120009AF	ZENERS,MTZJ12B
D8501	0DD100009AP	EG1ZV(1) TP SANKEN TP SANKEN
D8502	0DZ610009AA	ZENER,P6KE100A
D8503	0DZ610009AA	ZENER,P6KE100A
D8504	0DD100009AP	EG1ZV(1) TP SANKEN TP SANKEN
D8505	0DR240000BA	FML-24S BK SANKEN TO220 400V 1
D8506	0DD100009AP	EG1ZV(1) TP SANKEN TP SANKEN
D8507	0DD100009AP	EG1ZV(1) TP SANKEN TP SANKEN
D8508	0DZ120009AF	ZENERS,MTZJ12B

LOCA. NO	PART NO	DESCRIPTION
D8509	0DR240000BA	FML-24S BK SANKEN TO220 400V 1
D8510	0DZ680009BB	ZENERS,MTZJ6.8B
D8511	0DZ610009AA	ZENER,P6KE100A
D8515	0DD414809ED	1N4148 TA
D8601	0DZ620009BB	ZENERS,MTZJ6.2B
D8602	0DR011009AA	EG01AV1 TP SANKEN NON 600V 0.5
D8604	0DD184009AA	KDS184S CHIP 85V 300MA KEC TP
D8605	0DD184009AA	KDS184S CHIP 85V 300MA KEC TP
D8801	0DD100009AM	EU1ZV(1) TP SANKEN
D8802	0DD100009AM	EU1ZV(1) TP SANKEN
D8803	0DD414809ED	1N4148 TA
D8804	0DD100009DK	RU1P V(1) TP SANKEN
D8811	0DR290000AA	FMB-29L BK SANKEN TO220 90V 8A
D8812	0DR360000CA	FML-36S BK SANKEN TO3P 600V 20
D8813	0DR360000CA	FML-36S BK SANKEN TO3P 600V 20
D8814	0DZ910009AJ	ZENERS,MTZJ9.1B
D8815	0DD414809ED	1N4148 TA
D8816	0DR460009AA	RK46 TP SANKEN DO-214AC 60V 3.
D8818	0DR460009AA	RK46 TP SANKEN DO-214AC 60V 3.
D8819	0DZ150009AD	ZENERS,MTZJ15B
D8820	0DD100009AM	EU1ZV(1) TP SANKEN
D8821	0DZ120009AF	ZENERS,MTZJ12B
D8822	0DZ750009AG	ZENERS,MTZJ7.5B
D8900	0DD184009AA	KDS184S CHIP 85V 300MA KEC TP
D8901	0DD184009AA	KDS184S CHIP 85V 300MA KEC TP
D8903	0DD226239AA	CHIP KDS226 SOT-23
D8904	0DD226239AA	CHIP KDS226 SOT-23
D8907	0DD226239AA	CHIP KDS226 SOT-23
LD001	0DL200000CA	LED,SAM5670(DL-2LRG) BK Y-GREEN -
LD801	0DL233309AC	LED,SAM2333 TP KWANG GREEN/RED GRE
LD802	0DL233309AC	LED,SAM2333 TP KWANG GREEN/RED GRE
LD803	0DL233309AC	LED,SAM2333 TP KWANG GREEN/RED GRE
ZD101	0DZ510009DB	ZENERS,MTZJ5.1B
ZD101	0DZRM00178A	ZENERS,UDZS TE-17 5.1B ROHM R/TP SMD
ZD102	0DZ510009DB	ZENERS,MTZJ5.1B
ZD102	0DZRM00178A	ZENERS,UDZS TE-17 5.1B ROHM R/TP SMD
ZD8902	0DZRM00178A	ZENERS,UDZS TE-17 5.1B ROHM R/TP SMD
ZD8906	0DZ750009AG	ZENERS,MTZJ7.5B
ZD8908	0DZRM00178A	ZENERS,UDZS TE-17 5.1B ROHM R/TP SMD

CAPACITOR

C001	0CN1040K949	0.1M 50V Z
C002	0CE476DD618	47UF STD 10V 20%
C109	0CE107SF6DC	100UF MVG 16V M
C111	0CE476SF6DC	47UF MVG 16V M
C113	0CE476SF6DC	47UF MVG 16V M
C115	0CE476SF6DC	47UF MVG 16V M
C116	0CE476SF6DC	47UF MVG 16V M
C119	0CE476SF6DC	47UF MVG 16V M
C122	0CE476SF6DC	47UF MVG 16V M
C125	0CE106SF6DC	10UF MVG 16V 20%
C131	0CE476SF6DC	47UF MVG 16V M

For Capacitor & Resistors, the charactors at 2nd and 3rd digit in the P/No. means as follows;	CC, CX, CK, CN : Ceramic CQ : Polyestor CE : Electrolytic	RD : Carbon Film RS : Metal Oxide Film RN : Metal Film RF : Fusible

LOCA. NO	PART NO	DESCRIPTION
C135	0CE476SF6DC	47UF MVG 16V M
C139	0CE476SF6DC	47UF MVG 16V M
C150	0CE476SF6DC	47UF MVG 16V M
C154	0CE476SF6DC	47UF MVG 16V M
C166	0CE476SF6DC	47UF MVG 16V M
C168	0CE107SF6DC	100UF MVG 16V M
C171	0CE107SF6DC	100UF MVG 16V M
C172	0CE476SF6DC	47UF MVG 16V M
C173	0CE107SF6DC	100UF MVG 16V M
C202	0CE106SF6DC	10UF MVG 16V 20%
C203	0CE107SF6DC	100UF MVG 16V M
C205	0CK224DF56A	220000PF 2012 16V 10%
C212	0CK224DF56A	220000PF 2012 16V 10%
C214	0CE106SF6DC	10UF MVG 16V 20%
C224	0CE476SF6DC	47UF MVG 16V M
C227	0CE476SF6DC	47UF MVG 16V M
C230	0CK224DF56A	220000PF 2012 16V 10%
C233	0CE476SF6DC	47UF MVG 16V M
C246	0CE106SF6DC	10UF MVG 16V 20%
C255	0CE476SF6DC	47UF MVG 16V M
C267	0CE105SK6DC	1UF MVG 50V M
C274	0CE107SF6DC	100UF MVG 16V M
C275	0CE107SF6DC	100UF MVG 16V M
C278	0CE476SF6DC	47UF MVG 16V M
C288	0CE106SF6DC	10UF MVG 16V 20%
C290	0CE106SF6DC	10UF MVG 16V 20%
C293	0CE476SF6DC	47UF MVG 16V M
C297	0CE107SF6DC	100UF MVG 16V M
C300	0CE107SF6DC	100UF MVG 16V M
C310	0CE476SF6DC	47UF MVG 16V M
C373	0CE1051K636	1UF SM,SA 50V 20%
C402	0CE476SF6DC	47UF MVG 16V M
C405	0CE476SF6DC	47UF MVG 16V M
C408	0CE476SF6DC	47UF MVG 16V M
C411	0CE476SF6DC	47UF MVG 16V M
C414	0CE476SF6DC	47UF MVG 16V M
C439	0CE476SF6DC	47UF MVG 16V M
C441	0CE476SF6DC	47UF MVG 16V M
C442	0CE476SF6DC	47UF MVG 16V M
C471	0CE106SF6DC	10UF MVG 16V 20%
C476	0CE106SF6DC	10UF MVG 16V 20%
C479	0CE476SF6DC	47UF MVG 16V M
C487	0CE106SF6DC	10UF MVG 16V 20%
C503	0CE106SF6DC	10UF MVG 16V 20%
C506	0CE106SF6DC	10UF MVG 16V 20%
C509	0CE106SF6DC	10UF MVG 16V 20%
C512	0CE106SF6DC	10UF MVG 16V 20%
C515	0CE106SF6DC	10UF MVG 16V 20%
C518	0CE106SF6DC	10UF MVG 16V 20%
C521	0CE106SF6DC	10UF MVG 16V 20%
C524	0CE106SF6DC	10UF MVG 16V 20%
C554	0CE106SF6DC	10UF MVG 16V 20%

LOCA. NO	PART NO	DESCRIPTION
C601	0CE476SF6DC	47UF MVG 16V M
C602	0CE476SF6DC	47UF MVG 16V M
C604	0CE106SF6DC	10UF MVG 16V 20%
C609	0CE107SF6DC	100UF MVG 16V M
C610	0CE106SF6DC	10UF MVG 16V 20%
C611	0CE106SF6DC	10UF MVG 16V 20%
C612	0CE335SK6DC	3.3UF MVG 50V 20%
C614	0CE106SF6DC	10UF MVG 16V 20%
C616	0CE106SF6DC	10UF MVG 16V 20%
C626	0CE107SF6DC	100UF MVG 16V M
C627	0CE107SF6DC	100UF MVG 16V M
C630	0CE477DK618	470UF STD 50V 20%
C631	0CE477DK618	470UF STD 50V 20%
C640	0CE474SK6DC	0.47UF MVG 50V M
C641	0CE474SK6DC	0.47UF MVG 50V M
C643	0CE474SK6DC	0.47UF MVG 50V M
C644	0CE474SK6DC	0.47UF MVG 50V M
C647	0CE107SF6DC	100UF MVG 16V M
C651	0CE227VF6DC	220UF MV 16V 20%
C652	0CE105SK6DC	1UF MVG 50V M
C653	0CE107DH618	100UF STD 25V M
C653	0CE477DK618	470UF STD 50V 20%
C654	0CE106SF6DC	10UF MVG 16V 20%
C654	0CE477DK618	470UF STD 50V 20%
C655	0CE107DH618	100UF STD 25V M
C655	0CE477DK618	470UF STD 50V 20%
C656	0CE107DH618	100UF STD 25V M
C656	0CE477DK618	470UF STD 50V 20%
C658	0CQ6821N509	0.0068U 100V K
C659	0CE106SF6DC	10UF MVG 16V 20%
C659	181-120K	2200PF 4KV M
C660	0CQ6821N509	0.0068U 100V K
C660	181-120K	2200PF 4KV M
C661	0CQ1041N509	0.1U 100V K
C662	0CQ1041N509	0.1U 100V K
C699	0CE227VF6DC	220UF MV 16V 20%
C709	0CE476SF6DC	47UF MVG 16V M
C711	0CE106SF6DC	10UF MVG 16V 20%
C715	0CE106SF6DC	10UF MVG 16V 20%
C717	0CE106SF6DC	10UF MVG 16V 20%
C718	0CE106SF6DC	10UF MVG 16V 20%
C720	0CE105SK6DC	1UF MVG 50V M
C801	0CE106WH6DC	10UF MVK 25V 20%
C802	0CE227VF6DC	220UF MV 16V 20%
C804	0CE105WK6DC	1UF MVK 50V 20%
C806	0CE227VF6DC	220UF MV 16V 20%
C809	0CE105WK6DC	1UF MVK 50V 20%
C810	0CE227VF6DC	220UF MV 16V 20%
C811	0CE106WH6DC	10UF MVK 25V 20%
C813	0CE106WH6DC	10UF MVK 25V 20%
C814	0CE476SF6DC	47UF MVG 16V M
C815	0CE476SF6DC	47UF MVG 16V M

For Capacitor & Resistors, the charactors at 2nd and 3rd digit in the P/No. means as follows;	CC, CX, CK, CN : Ceramic CQ : Polyestor CE : Electrolytic	RD : Carbon Film RS : Metal Oxide Film RN : Metal Film RF : Fusible

LOCA. NO	PART NO	DESCRIPTION
C818	0CE106WH6DC	10UF MVK 25V 20%
C818	0CE227VF6DC	220UF MV 16V 20%
C820	0CE105WK6DC	1UF MVK 50V 20%
C821	0CE107SF6DC	100UF MVG 16V M
C824	0CE227VF6DC	220UF MV 16V 20%
C825	0CE106SF6DC	10UF MVG 16V 20%
C826	0CE476SF6DC	47UF MVG 16V M
C828	0CE106SF6DC	10UF MVG 16V 20%
C829	0CE106SF6DC	10UF MVG 16V 20%
C832	0CE476SF6DC	47UF MVG 16V M
C834	0CE106SF6DC	10UF MVG 16V 20%
C843	0CE227VF6DC	220UF MV 16V 20%
C844	0CE227VF6DC	220UF MV 16V 20%
C847	0CE227VF6DC	220UF MV 16V 20%
C849	0CE476SF6DC	47UF MVG 16V M
C850	0CE476SF6DC	47UF MVG 16V M
C855	0CE476SF6DC	47UF MVG 16V M
C856	0CE476SF6DC	47UF MVG 16V M
C861	0CE106SF6DC	10UF MVG 16V 20%
C863	0CE477BF618	470UF KME 16V M
C864	0CE477BF618	470UF KME 16V M
C869	0CE108DF618	1000UF STD 16V M
C870	0CE477BF618	470UF KME 16V M
C871	0CE107SF6DC	100UF MVG 16V M
C874	0CE227VF6DC	220UF MV 16V 20%
C876	0CE106SF6DC	10UF MVG 16V 20%
C877	0CE106SF6DC	10UF MVG 16V 20%
C1003	0CE107SF6DC	100UF MVG 16V M
C1007	0CE476SF6DC	47UF MVG 16V M
C1008	0CE476SF6DC	47UF MVG 16V M
C1009	0CE476SF6DC	47UF MVG 16V M
C1012	0CE107SF6DC	100UF MVG 16V M
C1017	0CE107SF6DC	100UF MVG 16V M
C1021	0CE476SF6DC	47UF MVG 16V M
C1022	0CE476SF6DC	47UF MVG 16V M
C1023	0CE476SF6DC	47UF MVG 16V M
C1025	0CE107SF6DC	100UF MVG 16V M
C1030	0CE476SF6DC	47UF MVG 16V M
C1103	0CE106SF6DC	10UF MVG 16V 20%
C1106	0CE107SF6DC	100UF MVG 16V M
C1110	0CE107SF6DC	100UF MVG 16V M
C1113	0CE476SF6DC	47UF MVG 16V M
C1720	0CE106SF6DC	10UF MVG 16V 20%
C7116	0CE475WJ6DC	4.7UF MVK 35V 20%
C8101	0CE106WH6DC	10UF MVK 25V 20%
C8105	0CE106WH6DC	10UF MVK 25V 20%
C8106	0CE106WH6DC	10UF MVK 25V 20%
C8110	0CE106WH6DC	10UF MVK 25V 20%
C8202	0CQ1031N509	0.01U 100V K
C8203	0CE105BK618	1UF KME 50V M
C8204	0CE226BV611	22UF KME TYPE 450V M
C8205	0CE477BJ618	470UF KME TYPE 35V 20%

LOCA. NO	PART NO	DESCRIPTION
C8207	0CE226BV611	22UF KME TYPE 450V M
C8208	0CK1040K945	0.1UF 50V Z
C8209	181-033E	1KV B 222K
C8210	0CE477BH618	470UF KME TYPE 25V 20%
C8211	0CK1040K945	0.1UF 50V Z
C8212	0CE108BF618	1000UF KME 16V M
C8213	181-091B	DE5105-979 SL 271J 1KV
C8214	181-091B	DE5105-979 SL 271J 1KV
C8215	181-033E	1KV B 222K
C8216	0CE108BF618	1000UF KME 16V M
C8217	181-091B	DE5105-979 SL 271J 1KV
C8218	0CE105EV618	1UF KMG 450V M
C8219	0CE105EV618	1UF KMG 450V M
C8221	181-013U	MPP 630V 0.1UF J
C8222	0CE227BH618	220UF KME 25V M
C8225	0CK1040K945	0.1UF 50V Z
C8301	0CQZVBK002D	A.C 275V 0.47UF K (S=22.5)
C8302	0CQZVBK002D	A.C 275V 0.47UF K (S=22.5)
C8303	0CQZVBK002D	A.C 275V 0.47UF K (S=22.5)
C8304	181-120K	2200PF 4KV M
C8305	181-120K	2200PF 4KV M
C8306	0CQZVBK002D	A.C 275V 0.47UF K (S=22.5)
C8307	0CB8241Y474	0.82UF D 630V J
C8308	0CB8241Y474	0.82UF D 630V J
C8309	181-035N	DE1010 B KD 471M
C8311	0CE337RV6A0	330UF KMH 450V M
C8312	0CE337RV6A0	330UF KMH 450V M
C8313	181-035N	DE1010 B KD 471M
C8314	0CE337RV6A0	330UF KMH 450V M
C8315	181-091D	DEHR33A102KN2A DE0905-979 R 1
C8316	181-033E	1KV B 222K
C8317	181-091D	DEHR33A102KN2A DE0905-979 R 1
C8318	181-091G	DEHR33D471KN3A DE0907-486 R 4
C8319	181-091G	DEHR33D471KN3A DE0907-486 R 4
C8320	0CE477BH618	470UF KME TYPE 25V 20%
C8321	0CQZVBK002D	A.C 275V 0.47UF K (S=22.5)
C8322	0CQZVBK002B	A.C 275V 0.15UF K (S=22.5)
C8327	181-033E	1KV B 222K
C8328	181-033E	1KV B 222K
C8329	181-033E	1KV B 222K
C8330	181-033E	1KV B 222K
C8331	181-091G	DEHR33D471KN3A DE0907-486 R 4
C8332	181-120K	2200PF 4KV M
C8333	181-120K	2200PF 4KV M
C8336	0CB8241Y474	0.82UF D 630V J
C8401	181-091R	1KV R 102K
C8402	0CC47001505	47PF 1KV K
C8404	0CC47001505	47PF 1KV K
C8407	0CBZVBK001B	0.056UF 800V J
C8409	0CC47001505	47PF 1KV K
C8410	0CQ2231N509	0.022U 100V K
C8411	0CE337RV6A0	330UF KMH 450V M

For Capacitor & Resistors, the charactors at 2nd and 3rd digit in the P/No. means as follows;	CC, CX, CK, CN : Ceramic CQ : Polyestor CE : Electrolytic	RD : Carbon Film RS : Metal Oxide Film RN : Metal Film RF : Fusible

LOCA. NO	PART NO	DESCRIPTION
C8412	0CE227BP650	220UF KME TYPE 160V 20%
C8413	0CE227BP650	220UF KME TYPE 160V 20%
C8414	0CE227BP650	220UF KME TYPE 160V 20%
C8416	0CQ1041N509	0.1U 100V K
C8504	181-091R	1KV R 102K
C8506	0CBZVBK001B	0.056UF 800V J
C8507	181-033T	2KV B 222K
C8508	0CBZVBK001B	0.056UF 800V J
C8510	0CC47001505	47PF 1KV K
C8511	0CE687RP6A0	680UF KMH 160V M
C8512	0CC47001505	47PF 1KV K
C8513	0CC47001505	47PF 1KV K
C8514	0CC47001505	47PF 1KV K
C8515	0CC47001505	47PF 1KV K
C8517	0CE687RP6A0	680UF KMH 160V M
C8518	0CE827RR6A0	820UF KMH 250V M
C8519	0CE827RR6A0	820UF KMH 250V M
C8520	0CE827RR6A0	820UF KMH 250V M
C8521	0CQ1031N509	0.01U 100V K
C8522	181-007H	MPE ECQ-V1H474JL3(TR), 50V 0.4
C8523	181-120K	2200PF 4KV M
C8524	0CE476BK618	47UF KME 50V M
C8525	0CQ4731N509	0.047U 100V K
C8601	0CE106WH6DC	10UF MVK 25V 20%
C8605	0CE106WH6DC	10UF MVK 25V 20%
C8606	0CE106WH6DC	10UF MVK 25V 20%
C8610	0CE106WH6DC	10UF MVK 25V 20%
C8802	0CE227BK618	220UF KME 50V M
C8803	0CK8210K515	820P 50V K
C8804	181-011B	0.001UF D 1.6KV J
C8805	0CK8210K515	820P 50V K
C8807	181-010P	PP 630V 0.068UF J
C8808	181-033T	2KV B 222K
C8811	181-007T	MPE ECQ-V1H105JL3(TR), 50V 1.0
C8812	0CE478BH650	4700UF KME 25V M
C8813	0CE478BH650	4700UF KME 25V M
C8815	0CE478BH650	4700UF KME 25V M
C8817	0CE478BH650	4700UF KME 25V M
C8818	0CE475BK618	4.7UF KME TYPE 50V 20%
C8819	0CE228EJ61A	2200UF KMG 35V M
C8820	0CQ1041N509	0.1U 100V K
C8821	0CQ1041N509	0.1U 100V K
C8822	0CE108BJ618	1000UF KME 35V M
C8824	0CE108BK61A	1000UF KME 50V M
C8825	0CE108BK61A	1000UF KME 50V M
C8834	0CE228BF618	2200UF KME 16V M
C8835	0CE228BF618	2200UF KME 16V M
C8836	0CE228BF618	2200UF KME 16V M
C8839	0CE228BF618	2200UF KME 16V M
C8841	0CQ1041N509	0.1U 100V K
C8900	0CE107BH618	100UF KME 25V M
C8901	0CE226BK618	22UF KME 50V M

LOCA. NO	PART NO	DESCRIPTION
C8903	0CE106DK618	10UF STD 50V M
C8905	0CE107BH618	100UF KME 25V M
C8907	0CE336DH618	33UF STD 25V 20%
FUSE & JACK		
F8301	0FS1502B67B	FUSE,SLOW BLOW 15000MA 25
F8302	131-098B	FUSE,SLOW BLOW 4000MA 250V
JAC201	6612VLH002A	JACK,RCA SP026B 4P RD/BK/BK/R
JA1103	380-363G	JACK,DIN 6046B-01S H=8.0 WITH
L8811	131-096E	FUSE,FAST BLOE 4000MA 125V
P103	380-389N	JACK,RCA S-456S-N A/V 3P RD-W
P104	380-389P	JACK,RCA S-456S-P A/V 3P GR-B
P201B	6612VJH018A	JACK,RCA PJ6058C-A A/V 2P MON
COIL & TRANSFORMER		
L001	0LA0102K119	INDUCTOR,10UH K
L801	6140VB0004B	COIL,CHOKE 26UH 1UEWPHY 22.5TURN
L804	6140VB0004B	COIL,CHOKE 26UH 1UEWPHY 22.5TURN
L808	6140VB0004B	COIL,CHOKE 26UH 1UEWPHY 22.5TURN
L813	6140VB0004B	COIL,CHOKE 26UH 1UEWPHY 22.5TURN
L816	150-C02F	COIL,CHOKE 82UH R1217
L8307	150-C02F	COIL,CHOKE 82UH R1217
L8810	150-C04J	COIL,CHOKE 3.8UH 0.65PHY 8.5TURN
L8812	150-C04J	COIL,CHOKE 3.8UH 0.65PHY 8.5TURN
L8814	150-C02F	COIL,CHOKE 82UH R1217
L8815	150-C02F	COIL,CHOKE 82UH R1217
L8816	6170VZ0005B	TRANSFORMER,H-DRIVER IRON-15 150UH SI-8150S
L8819	6170VZ0005B	TRANSFORMER,H-DRIVER IRON-15 150UH SI-8150S
L8820	150-C02F	COIL,CHOKE 82UH R1217
T8201	6170VS0001C	TRANSFORMER,STAND-BY EE1927 1400UH TNY255P
T8202	151-D05D	TRANSFORMER,STAND-BY EE1927 1200UH TNY255P
T8301	6170VG0001A	TRANSFORMER,POWER CH400125 700UH
T8302	6170VG0001A	TRANSFORMER,POWER CH400125 700UH
T8401	6170VMCA21C	TRANSFORMER,SMPS[COIL] EER4244 250UH UC3863DW ZCS
T8501	151-A10J	TRANSFORMER,SMPS[COIL] EER4445(HORIZONTAL) 360UH UC38
T8502	151-A10J	TRANSFORMER,SMPS[COIL] EER4445(HORIZONTAL) 360UH UC38
T8503	6170VMCA37A	TRANSFORMER,SMPS[COIL] PQ3535 40UH UC3863DW
T8801	151-A10H	TRANSFORMER,SMPS[COIL] EER4445(HORIZONTAL) 550UH
CONNECTOR		
P001B	387-B04H	CONNECTOR ASSY,4P (L=450)
P002B	387-B06A	CONNECTOR ASSY,6P (L=100)
P003A	387-A10L	CONNECTOR ASSY,10P (L=700)
P101	6630VGA001C	CONNECTOR (CIRC),D-SUB 15PIN 2.29MM
P804A	387-A05A	CONNECTOR ASSY,5P (L=100)
P805A	387-A07A	CONNECTOR ASSY,7P (L=100)
P806A	387-A05F	CONNECTOR ASSY,5P (L=350)
P807A	387-A15A	CONNECTOR ASSY,12P(L=100)
P808A	387-A04A	CONNECTOR ASSY,4P (L=100)
RESISTOR		
AR201	0RRZVTA001A	MNR-14-E0A-J-101 R OHM 100 OH

For Capacitor & Resistors, the charactors at 2nd and 3rd digit in the P/No. means as follows;	CC, CX, CK, CN : Ceramic CQ : Polyestor CE : Electrolytic	RD : Carbon Film RS : Metal Oxide Film RN : Metal Film RF : Fusible

LOCA. NO	PART NO	DESCRIPTION
AR202	0RRZVTA001A	MNR-14-E0A-J-101 R OHM 100 OH
AR203	0RRZVTA001A	MNR-14-E0A-J-101 R OHM 100 OH
AR204	0RRZVTA001A	MNR-14-E0A-J-101 R OHM 100 OH
AR401	0RRZVTA001A	MNR-14-E0A-J-101 R OHM 100 OH
AR402	0RRZVTA001A	MNR-14-E0A-J-101 R OHM 100 OH
AR403	0RRZVTA001A	MNR-14-E0A-J-101 R OHM 100 OH
AR404	0RRZVTA001A	MNR-14-E0A-J-101 R OHM 100 OH
AR405	0RRZVTA001A	MNR-14-E0A-J-101 R OHM 100 OH
AR406	0RRZVTA001A	MNR-14-E0A-J-101 R OHM 100 OH
AR407	0RRZVTA001A	MNR-14-E0A-J-101 R OHM 100 OH
AR408	0RRZVTA001A	MNR-14-E0A-J-101 R OHM 100 OH
AR409	0RRZVTA001A	MNR-14-E0A-J-101 R OHM 100 OH
AR410	0RRZVTA001A	MNR-14-E0A-J-101 R OHM 100 OH
AR411	0RRZVTA001A	MNR-14-E0A-J-101 R OHM 100 OH
AR412	0RRZVTA001A	MNR-14-E0A-J-101 R OHM 100 OH
AR413	0RRZVTA001A	MNR-14-E0A-J-101 R OHM 100 OH
AR414	0RRZVTA001A	MNR-14-E0A-J-101 R OHM 100 OH
AR415	0RRZVTA001A	MNR-14-E0A-J-101 R OHM 100 OH
AR416	0RRZVTA001A	MNR-14-E0A-J-101 R OHM 100 OH
AR417	0RRZVTA001A	MNR-14-E0A-J-101 R OHM 100 OH
AR418	0RRZVTA001A	MNR-14-E0A-J-101 R OHM 100 OH
AR419	0RRZVTA001A	MNR-14-E0A-J-101 R OHM 100 OH
AR420	0RRZVTA001A	MNR-14-E0A-J-101 R OHM 100 OH
AR421	0RRZVTA001A	MNR-14-E0A-J-101 R OHM 100 OH
AR422	0RRZVTA001A	MNR-14-E0A-J-101 R OHM 100 OH
AR423	0RRZVTA001A	MNR-14-E0A-J-101 R OHM 100 OH
AR424	0RRZVTA001A	MNR-14-E0A-J-101 R OHM 100 OH
AR425	0RRZVTA001A	MNR-14-E0A-J-101 R OHM 100 OH
AR426	0RRZVTA001A	MNR-14-E0A-J-101 R OHM 100 OH
AR427	0RRZVTA001A	MNR-14-E0A-J-101 R OHM 100 OH
AR428	0RRZVTA001A	MNR-14-E0A-J-101 R OHM 100 OH
AR501	0RRZVTA001A	MNR-14-E0A-J-101 R OHM 100 OH
AR502	0RRZVTA001A	MNR-14-E0A-J-101 R OHM 100 OH
AR503	0RRZVTA001A	MNR-14-E0A-J-101 R OHM 100 OH
AR504	0RRZVTA001A	MNR-14-E0A-J-101 R OHM 100 OH
AR505	0RRZVTA001A	MNR-14-E0A-J-101 R OHM 100 OH
AR506	0RRZVTA001A	MNR-14-E0A-J-101 R OHM 100 OH
AR507	0RRZVTA001A	MNR-14-E0A-J-101 R OHM 100 OH
AR508	0RRZVTA001A	MNR-14-E0A-J-101 R OHM 100 OH
AR509	0RRZVTA001A	MNR-14-E0A-J-101 R OHM 100 OH
AR510	0RRZVTA001A	MNR-14-E0A-J-101 R OHM 100 OH
AR511	0RRZVTA001A	MNR-14-E0A-J-101 R OHM 100 OH
AR512	0RRZVTA001A	MNR-14-E0A-J-101 R OHM 100 OH
AR513	0RRZVTA001A	MNR-14-E0A-J-101 R OHM 100 OH
AR514	0RRZVTA001A	MNR-14-E0A-J-101 R OHM 100 OH
AR515	0RRZVTA001A	MNR-14-E0A-J-101 R OHM 100 OH
AR516	0RRZVTA001A	MNR-14-E0A-J-101 R OHM 100 OH
AR517	0RRZVTA001A	MNR-14-E0A-J-101 R OHM 100 OH
AR518	0RRZVTA001A	MNR-14-E0A-J-101 R OHM 100 OH
AR519	0RRZVTA001A	MNR-14-E0A-J-101 R OHM 100 OH
AR520	0RRZVTA001A	MNR-14-E0A-J-101 R OHM 100 OH
AR521	0RRZVTA001A	MNR-14-E0A-J-101 R OHM 100 OH

LOCA. NO	PART NO	DESCRIPTION
AR522	0RRZVTA001A	MNR-14-E0A-J-101 R OHM 100 OH
AR523	0RRZVTA001A	MNR-14-E0A-J-101 R OHM 100 OH
AR524	0RRZVTA001A	MNR-14-E0A-J-101 R OHM 100 OH
AR525	0RRZVTA001A	MNR-14-E0A-J-101 R OHM 100 OH
AR526	0RRZVTA001A	MNR-14-E0A-J-101 R OHM 100 OH
AR527	0RRZVTA001A	MNR-14-E0A-J-101 R OHM 100 OH
AR528	0RRZVTA001A	MNR-14-E0A-J-101 R OHM 100 OH
AR529	0RRZVTA001A	MNR-14-E0A-J-101 R OHM 100 OH
AR530	0RRZVTA001A	MNR-14-E0A-J-101 R OHM 100 OH
AR531	0RRZVTA001A	MNR-14-E0A-J-101 R OHM 100 OH
AR532	0RRZVTA001A	MNR-14-E0A-J-101 R OHM 100 OH
AR533	0RRZVTA001A	MNR-14-E0A-J-101 R OHM 100 OH
AR534	0RRZVTA001A	MNR-14-E0A-J-101 R OHM 100 OH
AR535	0RRZVTA001A	MNR-14-E0A-J-101 R OHM 100 OH
AR701	0RRZVTA001A	MNR-14-E0A-J-101 R OHM 100 OH
AR702	0RRZVTA001A	MNR-14-E0A-J-101 R OHM 100 OH
AR703	0RRZVTA001A	MNR-14-E0A-J-101 R OHM 100 OH
AR704	0RRZVTA001A	MNR-14-E0A-J-101 R OHM 100 OH
AR705	0RRZVTA001A	MNR-14-E0A-J-101 R OHM 100 OH
AR706	0RRZVTA001A	MNR-14-E0A-J-101 R OHM 100 OH
D8309	0RS0222H609	22 OHM 1/2 W 5.00%
D8310	0RS0222H609	22 OHM 1/2 W 5.00%
R006	0RD3300F609	330 OHM 1/6 W 5.00%
R007	0RD3300F609	330 OHM 1/6 W 5.00%
R101	0RD0822F609	82 OHM 1/6 W 5.00%
R102	0RD0822F609	82 OHM 1/6 W 5.00%
R623	0RS0221H609	2.2 OHM 1/2 W 5.00%
R624	0RS0221H609	2.2 OHM 1/2 W 5.00%
R627	0RS2701K607	2.7K OHM 2 W 5.00%
R628	0RS2701K607	2.7K OHM 2 W 5.00%
R655	0RD4700H609	470 OHM 1/2 W 5.00%
R656	0RD4700H609	470 OHM 1/2 W 5.00%
R8151	0RKZVTA001D	10M OHM 1/2 W 5%
R8201	0RS8202K607	82K OHM 2 W 5.00%
R8202	0RD2203F609	220K OHM 1/6 W 5.00%
R8203	180-A04D	RW RECT G 5W 10.0 J SINGLE
R8204	0RS2002H609	20K OHM 1/2 W 5.00%
R8205	0RD1001F609	1K OHM 1/6 W 5.00%
R8206	0RD2202F609	22K OHM 1/6 W 5.00%
R8207	0RD2202F609	22K OHM 1/6 W 5.00%
R8208	0RD1002F609	10K OHM 1/6 W 5.00%
R8209	0RD1002F609	10K OHM 1/6 W 5.00%
R8210	0RD1002F609	10K OHM 1/6 W 5.00%
R8211	0RD1002F609	10K OHM 1/6 W 5.00%
R8212	0RD1002F609	10K OHM 1/6 W 5.00%
R8214	0RD1001F609	1K OHM 1/6 W 5.00%
R8216	0RD4702F609	47K OHM 1/6 W 5.00%
R8217	0RD1003H609	100K OHM 1/2 W 5.00%
R8218	0RS0102H609	10 OHM 1/2 W 5.00%
R8220	0RD4702F609	47K OHM 1/6 W 5.00%
R8221	0RD4702F609	47K OHM 1/6 W 5.00%
R8225	0RS1000H609	100 OHM 1/2 W 5.00%

For Capacitor & Resistors, the charactors at 2nd and 3rd digit in the P/No. means as follows;	CC, CX, CK, CN : Ceramic CQ : Polyestor CE : Electrolytic	RD : Carbon Film RS : Metal Oxide Film RN : Metal Film RF : Fusible

LOCA. NO	PART NO	DESCRIPTION
R8227	0RN3001F409	3K OHM 1/6 W 1.00%
R8228	0RN3901F409	3.9K OHM 1/6 W 1.00%
R8230	0RD1000F609	100 OHM 1/6 W 5.00%
R8231	0RD0331F609	3.3 OHM 1/6 W 5.00%
R8232	0RKZVTA001K	0.47M OHM 1/2 W 5%
R8233	0RD4701F609	4.7K OHM 1/6 W 5.00%
R8234	0RN8201F409	8.2K OHM 1/6 W 1.00%
R8235	0RKZVTA001K	0.47M OHM 1/2 W 5%
R8238	0RD4701F609	4.7K OHM 1/6 W 5.00%
R8301	0RMZVBK004C	4.7 OHM 10W +/-5% RWS V-TYPE
R8302	0RMZVBK004C	4.7 OHM 10W +/-5% RWS V-TYPE
R8303	0RMZVBK004C	4.7 OHM 10W +/-5% RWS V-TYPE
R8307	0RS0272H609	27 OHM 1/2 W 5.00%
R8308	0RS0272H609	27 OHM 1/2 W 5.00%
R8312	0RS0222H609	22 OHM 1/2 W 5.00%
R8313	0RS0222H609	22 OHM 1/2 W 5.00%
R8316	0RD1002F609	10K OHM 1/6 W 5.00%
R8318	0RD1002F609	10K OHM 1/6 W 5.00%
R8319	0RS0102H609	10 OHM 1/2 W 5.00%
R8320	0RS0102H609	10 OHM 1/2 W 5.00%
R8324	0RS5602K607	56K OHM 2 W 5.00%
R8325	0RS5602K607	56K OHM 2 W 5.00%
R8326	0RMZVBK001F	0.1 OHM 10W +/-5% MPR V-TYPE
R8327	0RMZVBK001F	0.1 OHM 10W +/-5% MPR V-TYPE
R8329	0RMZVBK001F	0.1 OHM 10W +/-5% MPR V-TYPE
R8330	0RMZVBK001F	0.1 OHM 10W +/-5% MPR V-TYPE
R8340	0RS4701H609	4.7K OHM 1/2 W 5.00%
R8401	0RS0472H609	47 OHM 1/2 W 5.00%
R8402	0RD4700F609	470 OHM 1/6 W 5.00%
R8403	0RS0102H609	10 OHM 1/2 W 5.00%
R8405	0RS0472H609	47 OHM 1/2 W 5.00%
R8406	0RS0102H609	10 OHM 1/2 W 5.00%
R8407	0RN5601F409	5.6K OHM 1/6 W 1.00%
R8408	0RD2201F609	2.2K OHM 1/6 W 5.00%
R8409	0RS5602H609	56K OHM 1/2 W 5.00%
R8410	0RS4702H609	47K OHM 1/2 W 5.00%
R8412	0RD1502F609	15K OHM 1/6 W 5.00%
R8413	0RD3002F609	30K OHM 1/6 W 5.00%
R8414	0RN1002F409	10K OHM 1/6 W 1.00%
R8415	0RD1501F609	1.5K OHM 1/6 W 5.00%
R8416	0RD2001F609	2K OHM 1/6 W 5.00%
R8418	0RD1002F609	10K OHM 1/6 W 5.00%
R8419	0RD1002F609	10K OHM 1/6 W 5.00%
R8421	0RMZVBK001D	0.33 OHM 5W J(5%) MPR V-TYPE(P
R8423	0RN7502F409	75K OHM 1/6 W 1.00%
R8425	0RD2201F609	2.2K OHM 1/6 W 5.00%
R8501	0RS0472H609	47 OHM 1/2 W 5.00%
R8502	0RS0102H609	10 OHM 1/2 W 5.00%
R8503	0RD4700F609	470 OHM 1/6 W 5.00%
R8504	0RS0472H609	47 OHM 1/2 W 5.00%
R8505	0RS0102H609	10 OHM 1/2 W 5.00%
R8507	0RS0102H609	10 OHM 1/2 W 5.00%

LOCA. NO	PART NO	DESCRIPTION
R8508	0RS0472H609	47 OHM 1/2 W 5.00%
R8509	0RS0102H609	10 OHM 1/2 W 5.00%
R8510	0RS0472H609	47 OHM 1/2 W 5.00%
R8514	0RD1002F609	10K OHM 1/6 W 5.00%
R8516	0RD1502F609	15K OHM 1/6 W 5.00%
R8517	0RD1503H609	150K OHM 1/2 W 5.00%
R8518	0RN1002F409	10K OHM 1/6 W 1.00%
R8519	0RD3301F609	3.3K OHM 1/6 W 5.00%
R8522	0RD1002F609	10K OHM 1/6 W 5.00%
R8523	0RD1002F609	10K OHM 1/6 W 5.00%
R8524	0RN5602F409	56K OHM 1/6 W 1.00%
R8525	0RN7502F409	75K OHM 1/6 W 1.00%
R8526	0RN8202F409	82K OHM 1/6 W 1.00%
R8527	0RD8202H609	82K OHM 1/2 W 5.00%
R8528	0RD3302F609	33K OHM 1/6 W 5.00%
R8529	0RN8202F409	82K OHM 1/6 W 1.00%
R8530	0RD4700F609	470 OHM 1/6 W 5.00%
R8531	0RD4700F609	470 OHM 1/6 W 5.00%
R8532	0RS1001H609	1K OHM 1/2 W 5.00%
R8533	0RD2201F609	2.2K OHM 1/6 W 5.00%
R8536	0RS2202H609	22K OHM 1/2 W 5.00%
R8538	0RMZVBK004D	6.8 OHM 10W +/-5% RWS V-TYPE
R8539	0RMZVBK004D	6.8 OHM 10W +/-5% RWS V-TYPE
R8540	0RMZVBK004D	6.8 OHM 10W +/-5% RWS V-TYPE
R8541	0RS3902K607	39K OHM 2 W 5.00%
R8542	0RS3902K607	39K OHM 2 W 5.00%
R8543	0RS2202H609	22K OHM 1/2 W 5.00%
R8544	0RS3902K607	39K OHM 2 W 5.00%
R8545	0RD1503H609	150K OHM 1/2 W 5.00%
R8801	0RS3902K607	39K OHM 2 W 5.00%
R8802	0RS5602K607	56K OHM 2 W 5.00%
R8803	0RS0332H609	33 OHM 1/2 W 5.00%
R8804	0RD2701F609	2.7K OHM 1/6 W 5.00%
R8805	0RD4701F609	4.7K OHM 1/6 W 5.00%
R8806	0RD1001F609	1K OHM 1/6 W 5.00%
R8807	180-A01H	RW ROUND G 2W 0.27 J
R8808	0RMZVBK002B	47K OHM 5W 5% RSR V-TYPE(PITCH
R8814	0RD3301F609	3.3K OHM 1/6 W 5.00%
R8815	0RD4700F609	470 OHM 1/6 W 5.00%
R8816	0RS2701K607	2.7K OHM 2 W 5.00%
R8816	0RS2701K607	2.7K OHM 2 W 5.00%
R8817	0RS2701K607	2.7K OHM 2 W 5.00%
R8817	0RS2701K607	2.7K OHM 2 W 5.00%
R8818	0RS2701K607	2.7K OHM 2 W 5.00%
R8819	0RS2701K607	2.7K OHM 2 W 5.00%
R8820	0RD1002F609	10K OHM 1/6 W 5.00%
R8820	0RS2701K607	2.7K OHM 2 W 5.00%
R8823	0RD0912F609	91 OHM 1/6 W 5.00%
R8824	0RD1301F609	1.3K OHM 1/6 W 5.00%
R8825	0RD4701F609	4.7K OHM 1/6 W 5.00%
R8826	0RD5100F609	510 OHM 1/6 W 5.00%
R8827	0RD4701F609	4.7K OHM 1/6 W 5.00%

For Capacitor & Resistors, the charactors at 2nd and 3rd digit in the P/No. means as follows;	CC, CX, CK, CN : Ceramic CQ : Polyestor CE : Electrolytic	RD : Carbon Film RS : Metal Oxide Film RN : Metal Film RF : Fusible

LOCA. NO	PART NO	DESCRIPTION
R8828	0RD1001F609	1K OHM 1/6 W 5.00%
R8830	0RD1002F609	10K OHM 1/6 W 5.00%
VR801	0RV5102D550	VARIABLE[SERMENT],1K OHM 6 AG L3P5
VR8401	180-F03L	VARIABLE,EVN-DJAA03 B104 SEMI-FIX(H) TA
VR8501	180-F03L	VARIABLE,EVN-DJAA03 B104 SEMI-FIX(H) TA
SWITCH		
SW001	140-315A	SWITCH,TACT SKHV17910B NON 12V
SW002	140-315A	SWITCH,TACT SKHV17910B NON 12V
SW003	140-315A	SWITCH,TACT SKHV17910B NON 12V
SW004	140-315A	SWITCH,TACT SKHV17910B NON 12V
FILTER		
F601	6200VJS001A	FILTER(CIRC),EMI ZJY51R5-4P DC 50VOLT 2A
F602	6200VJS001A	FILTER(CIRC),EMI ZJY51R5-4P DC 50VOLT 2A
L102	6210VC0006A	FILTER(CIRC),EMC FBMH3216 HM501NT
L103	6210VC0006A	FILTER(CIRC),EMC FBMH3216 HM501NT
L104	6210VC0006A	FILTER(CIRC),EMC FBMH3216 HM501NT
L105	6210VC0006A	FILTER(CIRC),EMC FBMH3216 HM501NT
L201	6210VC0006A	FILTER(CIRC),EMC FBMH3216 HM501NT
L202	6210VC0006A	FILTER(CIRC),EMC FBMH3216 HM501NT
L250	6210VC0006A	FILTER(CIRC),EMC FBMH3216 HM501NT
L251	6210VC0006A	FILTER(CIRC),EMC FBMH3216 HM501NT
L252	6210VC0006A	FILTER(CIRC),EMC FBMH3216 HM501NT
L253	6210VC0006A	FILTER(CIRC),EMC FBMH3216 HM501NT
L401	6210VC0006A	FILTER(CIRC),EMC FBMH3216 HM501NT
L402	6210VC0006A	FILTER(CIRC),EMC FBMH3216 HM501NT
L403	6210VC0006A	FILTER(CIRC),EMC FBMH3216 HM501NT
L404	6210VC0006A	FILTER(CIRC),EMC FBMH3216 HM501NT
L405	6210VC0006A	FILTER(CIRC),EMC FBMH3216 HM501NT
L407	6210VC0006A	FILTER(CIRC),EMC FBMH3216 HM501NT
L408	6210VC0006A	FILTER(CIRC),EMC FBMH3216 HM501NT
L409	6210VC0006A	FILTER(CIRC),EMC FBMH3216 HM501NT
L411	6210VC0006A	FILTER(CIRC),EMC FBMH3216 HM501NT
L412	6210VC0006A	FILTER(CIRC),EMC FBMH3216 HM501NT
L501	6210VC0006A	FILTER(CIRC),EMC FBMH3216 HM501NT
L502	6210VC0006A	FILTER(CIRC),EMC FBMH3216 HM501NT
L503	6210VC0006A	FILTER(CIRC),EMC FBMH3216 HM501NT
L504	6210VC0006A	FILTER(CIRC),EMC FBMH3216 HM501NT
L505	6210VC0006A	FILTER(CIRC),EMC FBMH3216 HM501NT
L506	6210VC0006A	FILTER(CIRC),EMC FBMH3216 HM501NT
L507	6210VC0006A	FILTER(CIRC),EMC FBMH3216 HM501NT
L508	6210VC0006A	FILTER(CIRC),EMC FBMH3216 HM501NT
L509	6210VC0006A	FILTER(CIRC),EMC FBMH3216 HM501NT
L601	150-F09A	FILTER(CIRC),EMC SQE2222 7-14MH 0.37PHY
L602	6210VC0006A	FILTER(CIRC),EMC FBMH3216 HM501NT
L603	6210VC0006A	FILTER(CIRC),EMC FBMH3216 HM501NT
L604	6210VC0006A	FILTER(CIRC),EMC FBMH3216 HM501NT
L620	6210VC0006A	FILTER(CIRC),EMC FBMH3216 HM501NT
L701	6210VC0006A	FILTER(CIRC),EMC FBMH3216 HM501NT
L802	6210VC0006A	FILTER(CIRC),EMC FBMH3216 HM501NT
L803	6210VC0006A	FILTER(CIRC),EMC FBMH3216 HM501NT

LOCA. NO	PART NO	DESCRIPTION
L805	6210VC0006A	FILTER(CIRC),EMC FBMH3216 HM501NT
L806	6210VC0006A	FILTER(CIRC),EMC FBMH3216 HM501NT
L809	6210VC0006A	FILTER(CIRC),EMC FBMH3216 HM501NT
L810	6210VC0006A	FILTER(CIRC),EMC FBMH3216 HM501NT
L811	6210VC0006A	FILTER(CIRC),EMC FBMH3216 HM501NT
L812	6210VC0006A	FILTER(CIRC),EMC FBMH3216 HM501NT
L815	6210VC0006A	FILTER(CIRC),EMC FBMH3216 HM501NT
L901	6210VC0006A	FILTER(CIRC),EMC FBMH3216 HM501NT
L902	6210VC0006A	FILTER(CIRC),EMC FBMH3216 HM501NT
L903	6210VC0006A	FILTER(CIRC),EMC FBMH3216 HM501NT
L1001	6210VC0006A	FILTER(CIRC),EMC FBMH3216 HM501NT
L1002	6210VC0006A	FILTER(CIRC),EMC FBMH3216 HM501NT
L1003	6210VC0006A	FILTER(CIRC),EMC FBMH3216 HM501NT
L1101	6210VC0006A	FILTER(CIRC),EMC FBMH3216 HM501NT
L1720	6210VC0006A	FILTER(CIRC),EMC FBMH3216 HM501NT
L8301	6200JB8006D	FILTER(CIRC),EMC LS614046 4600UH
L8302	6200JB8006D	FILTER(CIRC),EMC LS614046 4600UH
L8303	6200JB8006D	FILTER(CIRC),EMC LS614046 4600UH
L8305	150-F06D	FILTER(CIRC),EMC SQE2930 MH
L8306	6200VLB005E	FILTER(CIRC),EMC COOL-27(TROIDAL) ,82MH
L8401	125-022K	FILTER(CIRC),EMC FERRITE 1UH
L8801	125-022K	FILTER(CIRC),EMC FERRITE 1UH
L8802	125-022K	FILTER(CIRC),EMC FERRITE 1UH
MISCELLANEOUS		
GND1	302-987A	SHIELD,TERMINAL EARTH
GND2	302-987A	SHIELD,TERMINAL EARTH
HOLDER	341-690B	HOLDER,LEAD WIRE SADDLE DAWS-2N
HOLDER	341-690B	HOLDER,LEAD WIRE SADDLE DAWS-2N
IC709	381-203E	SOCKET (CIRC),IC 32PIN(2.54-15.24 AMMON)
PA001	6726VH0001A	REMOTE CONTROLLER RECEIVER,TSOP1238RF1 38KHZ
RL8301	6920VA1001A	RELAY,FORM DH12D1-O(M)-16A DAIICHI A
RL8302	6920VA1001A	RELAY,FORM DH12D1-O(M)-16A DAIICHI A
TY8501	6030V00001A	SCR,SANKEN TF541S 500V 5A
VA8301	164-003G	VARISTOR,TVR621D14A 620V 10%
VA8302	164-003G	VARISTOR,TVR621D14A 620V 10%
X201	6202VDB007B	RESONATOR,CRYSTAL HC49U 20.250MHZ 3
X601	156-A02M	RESONATOR,CRYSTAL HC49U 18.432MHZ 30P
X701	6202VDT002B	RESONATOR,CRYSTAL SX-1SMD 14.318MHZ
X1101	6204V00001K	OSCILLATOR,SCO-0650-27.0M 27
ACCESSORIES		
A1	3828VA0276A	MANUAL,OWNERS NP00KA MT/MZ-60PZ10
A2	6710V00067M	REMOTE CONTROLLER
A3	6410VEH003B	POWER CORD
A4	6866VA9001B	CONNECTOR (CIRC),2990-9C UL 1161 AWG 26 TWI 700

PRINTED CIRCUIT BOARD

MAIN(TOP)

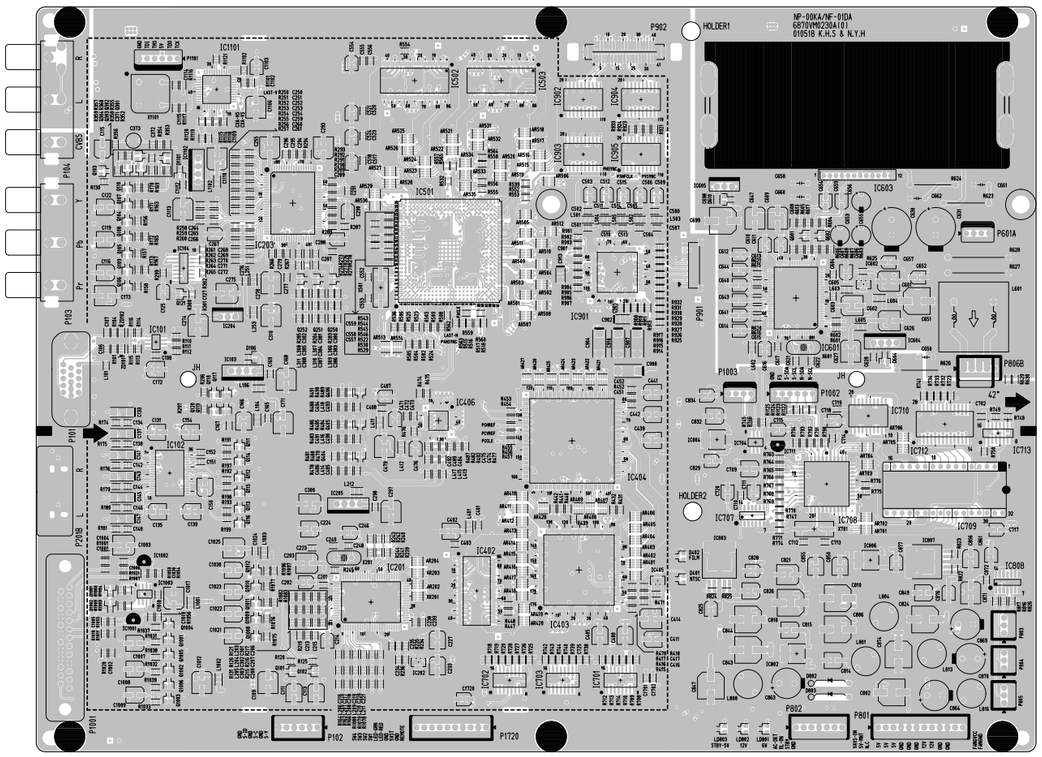

MAIN(BOTTOM)

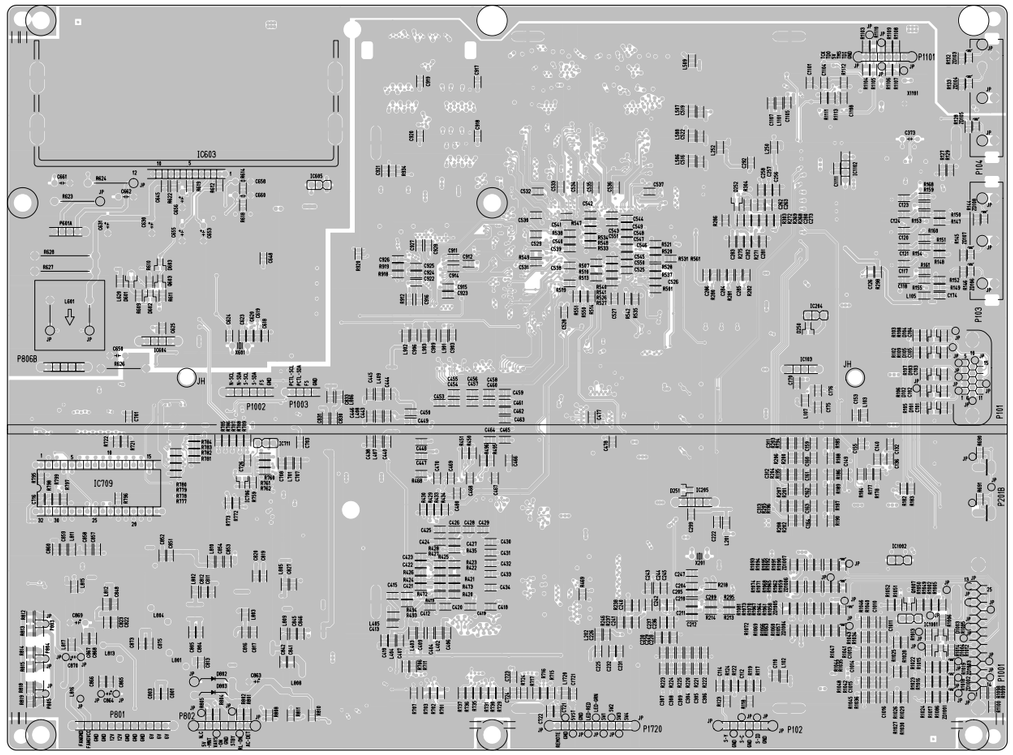

POWER(TOP)

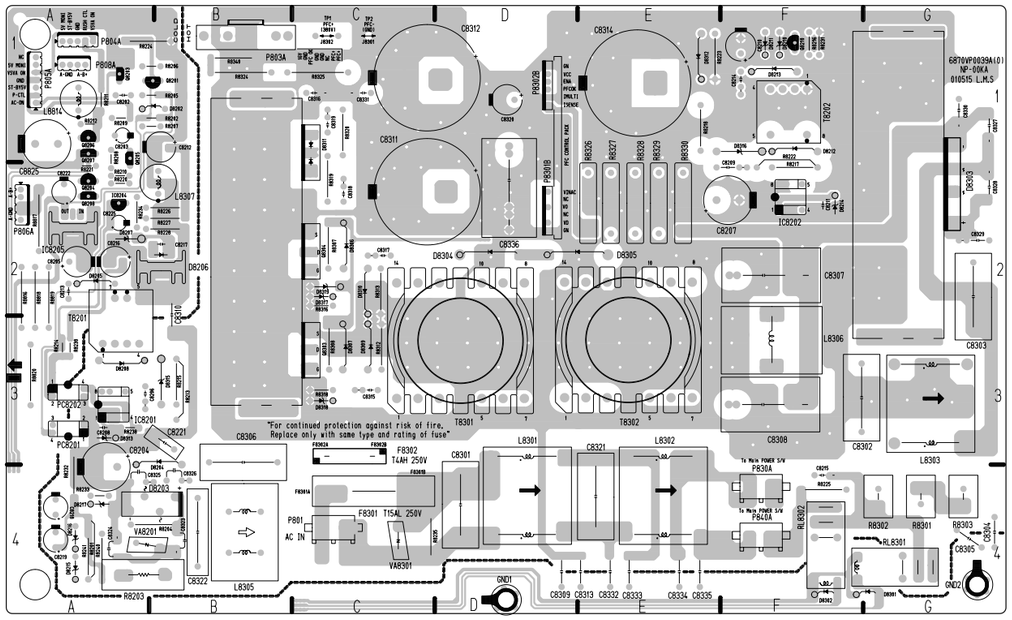

POWER(BOTTOM)

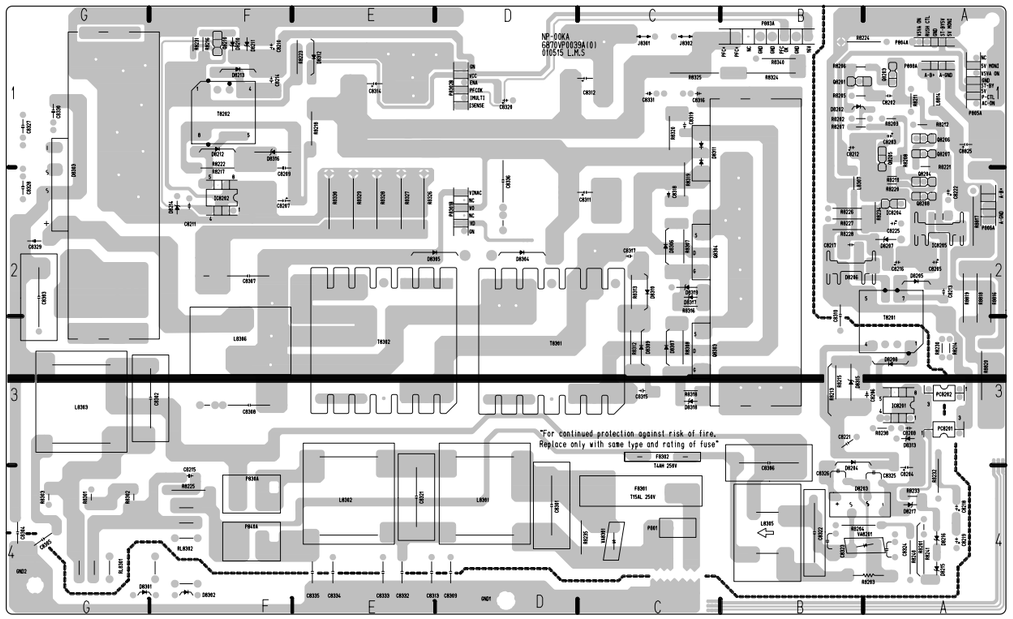

POWER MAIN(TOP)

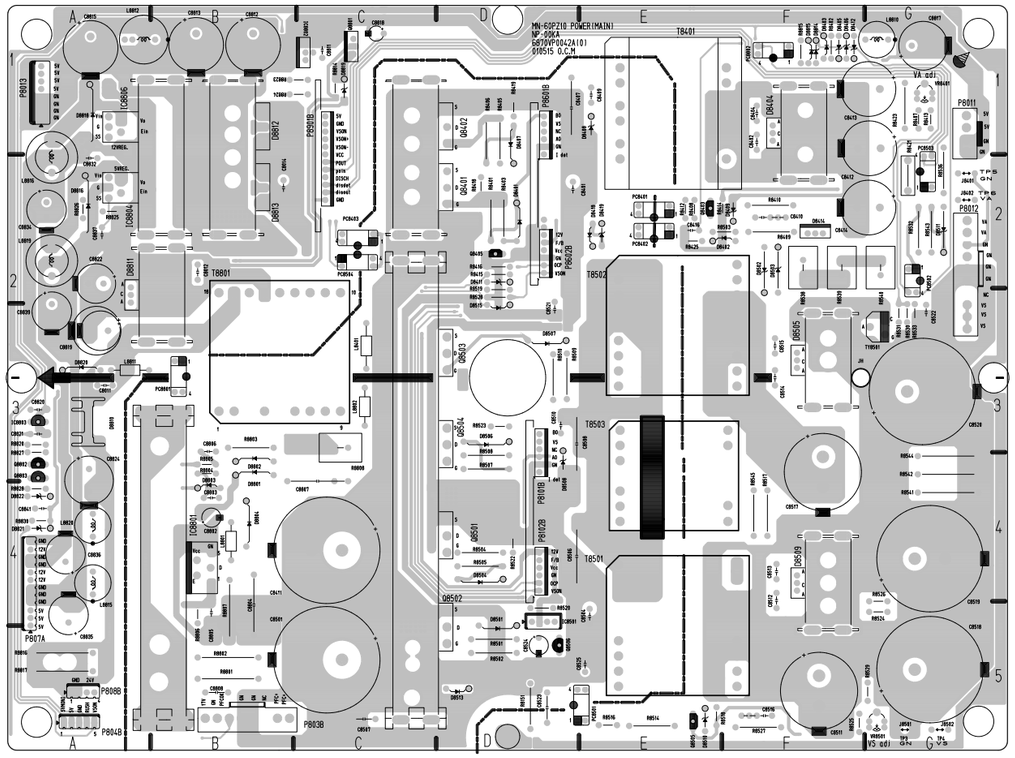

POWER MAIN(BOTTOM)

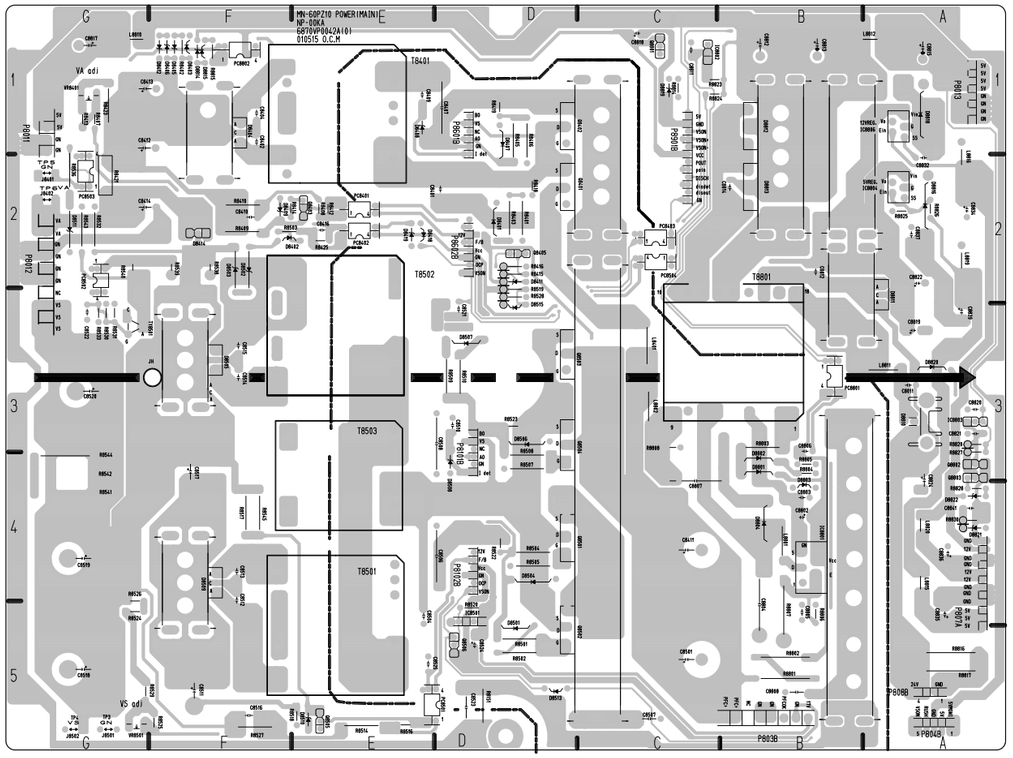

CONTROL(TOP)

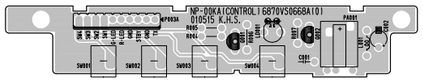

CONTROL(BOTTOM)

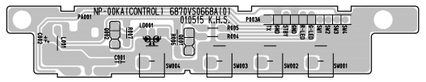

A/V(TOP)

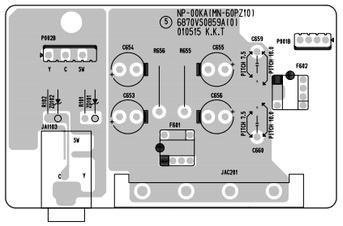

A/V(BOTTOM)

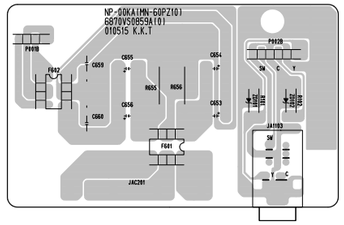

POWER PFC(TOP)

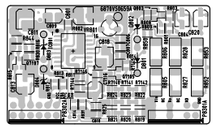

POWER VA(TOP)

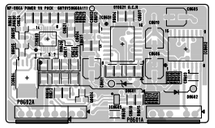

POWER VS(TOP)

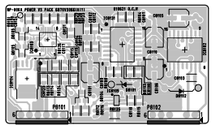

POWER PFC(BOTTOM)

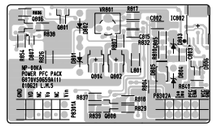

POWER VA(BOTTOM)

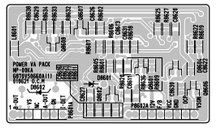

POWER VS(BOTTOM)

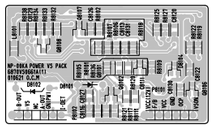

POWER CONTROL(TOP)

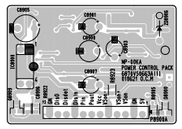

POWER CONTROL(BOTTOM)

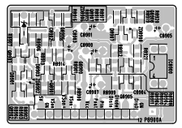

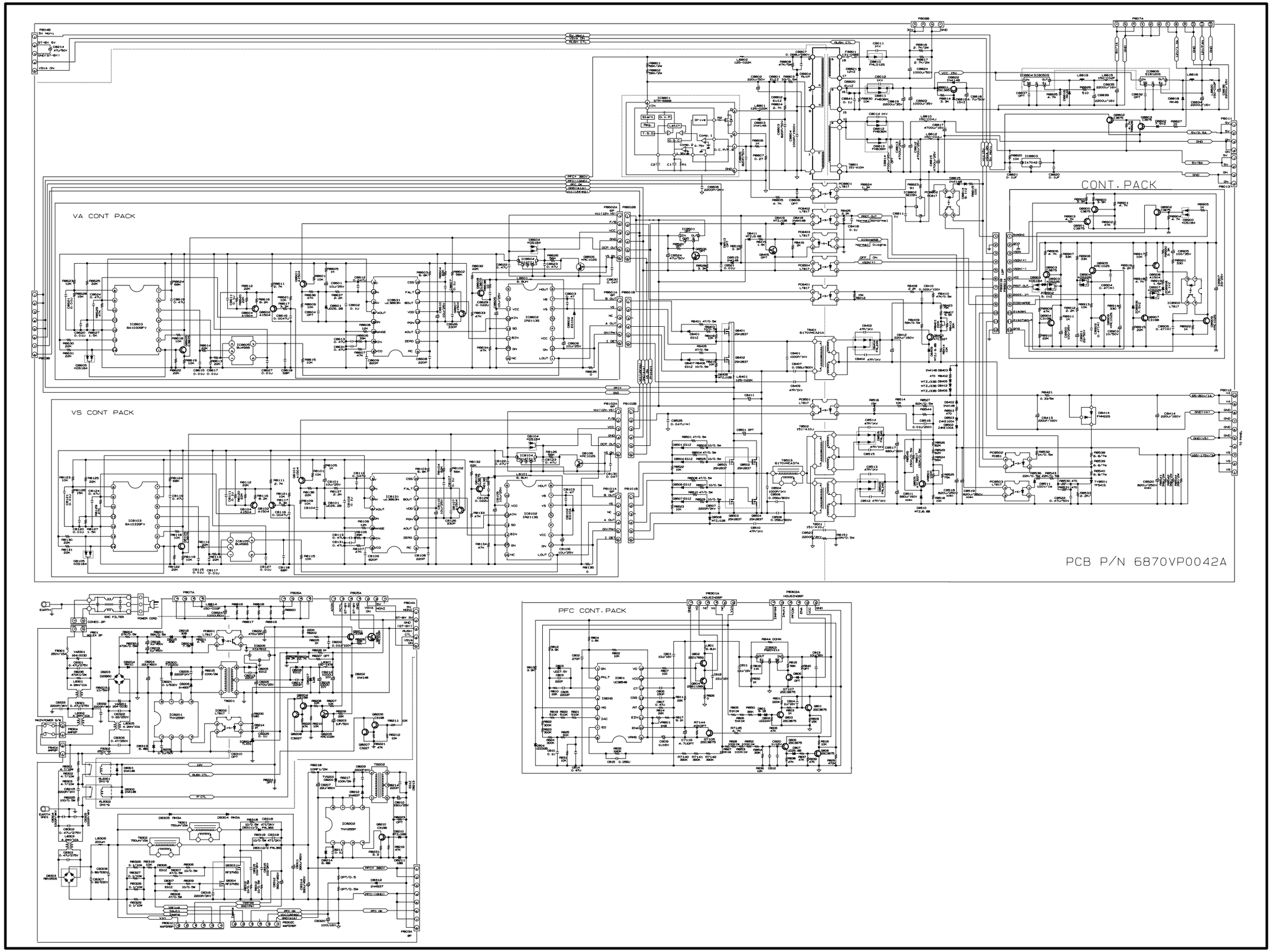
VA CONT PACK
VS CONT PACK
CONT. PACK
PFC CONT. PACK
PCB P/N 6870VP0042A

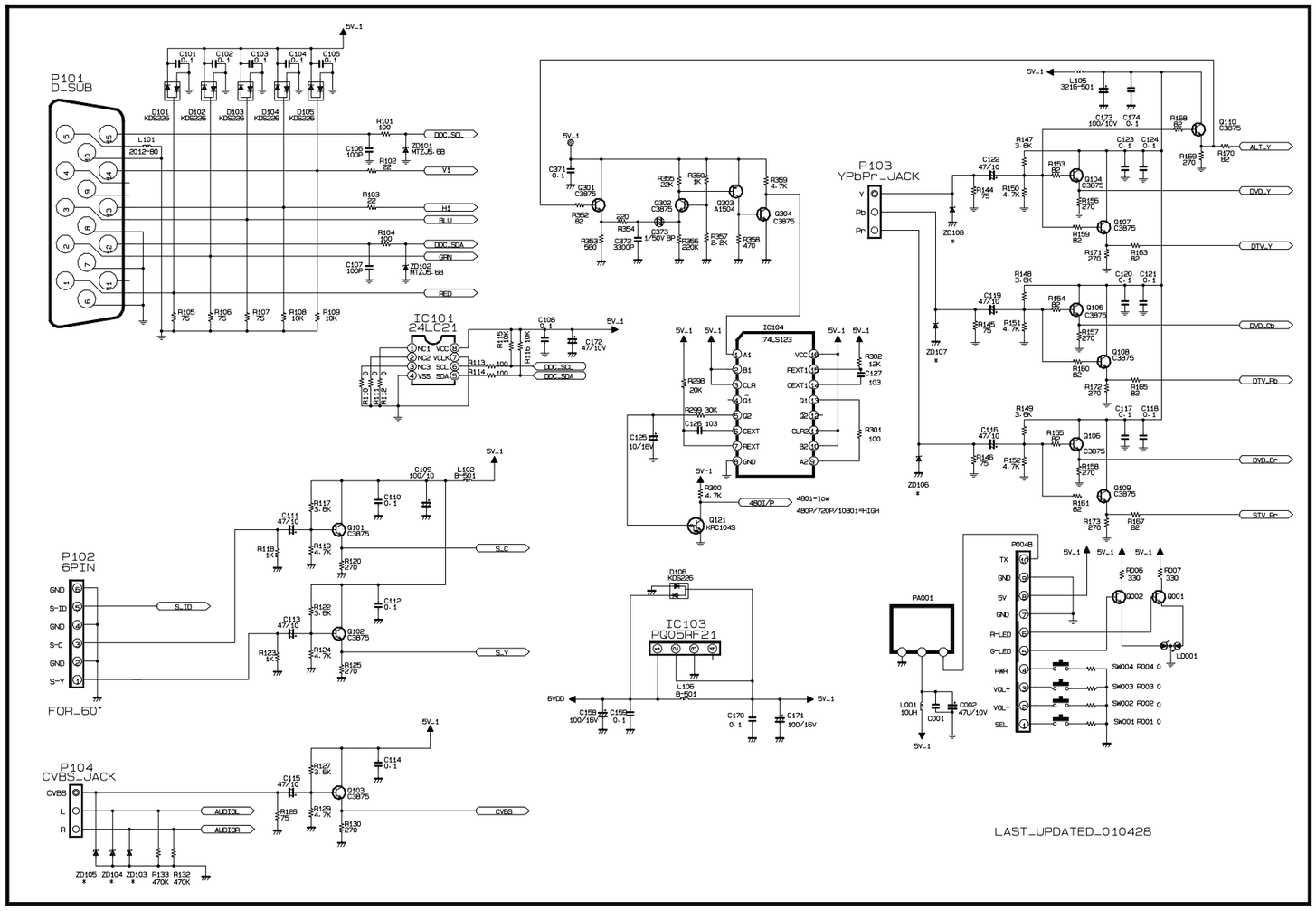
P101
D_SUB
P102
6PIN
FOR_60"
P103
YPbPr_JACK
P104
CVBS_JACK
IC101
24LC21
IC102
M52758FP
IC103
PQ05RF21
IC104
74LS123
P004B
PA001
LAST_UPDATED_010428

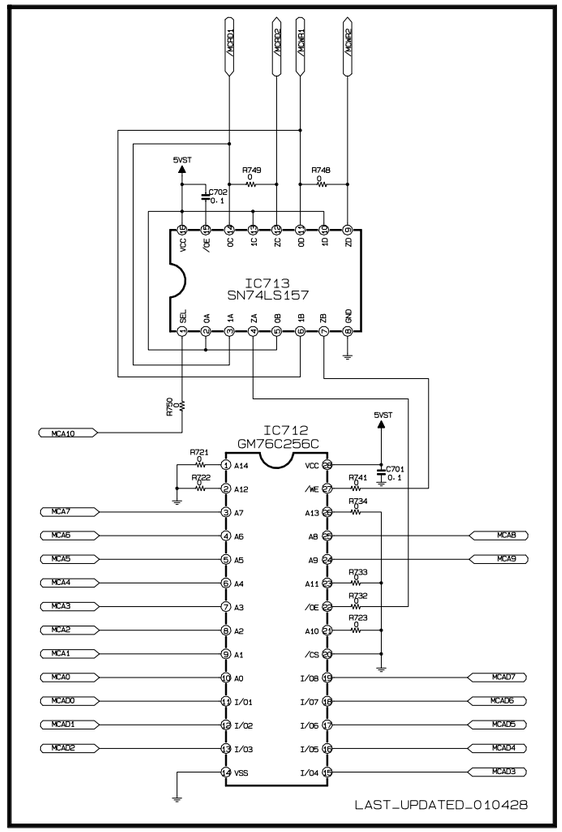
IC713
SN74LS157
IC712
GM76C256C
LAST_UPDATED_010428

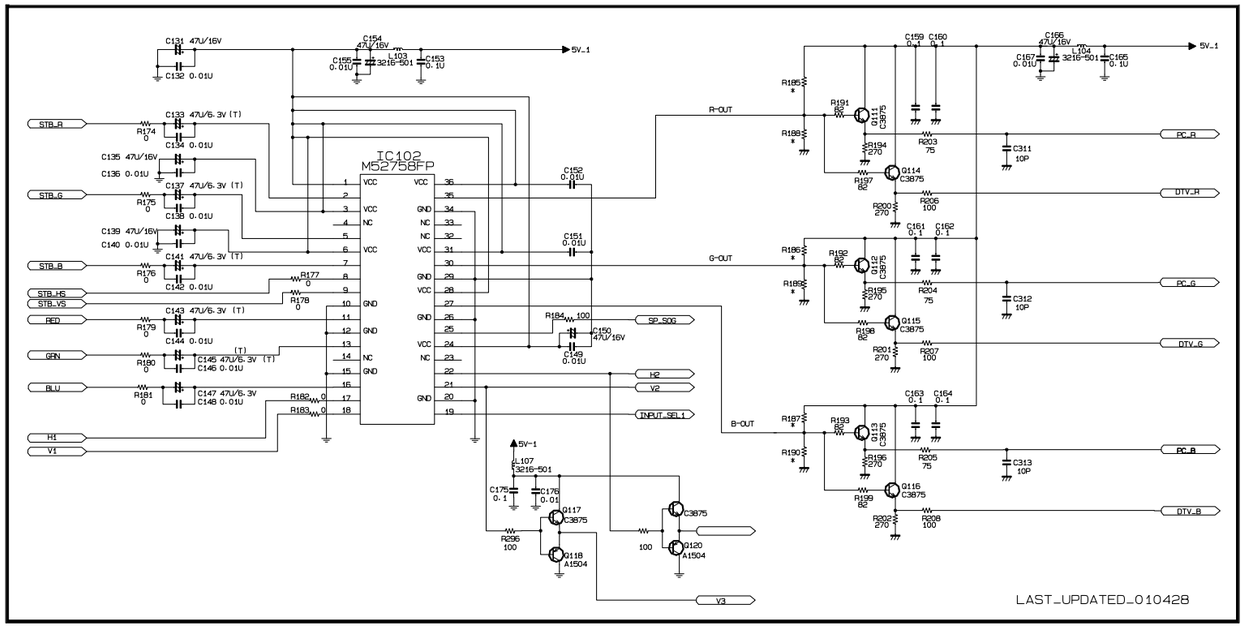
IC102
M52758FP
LAST_UPDATED_010428

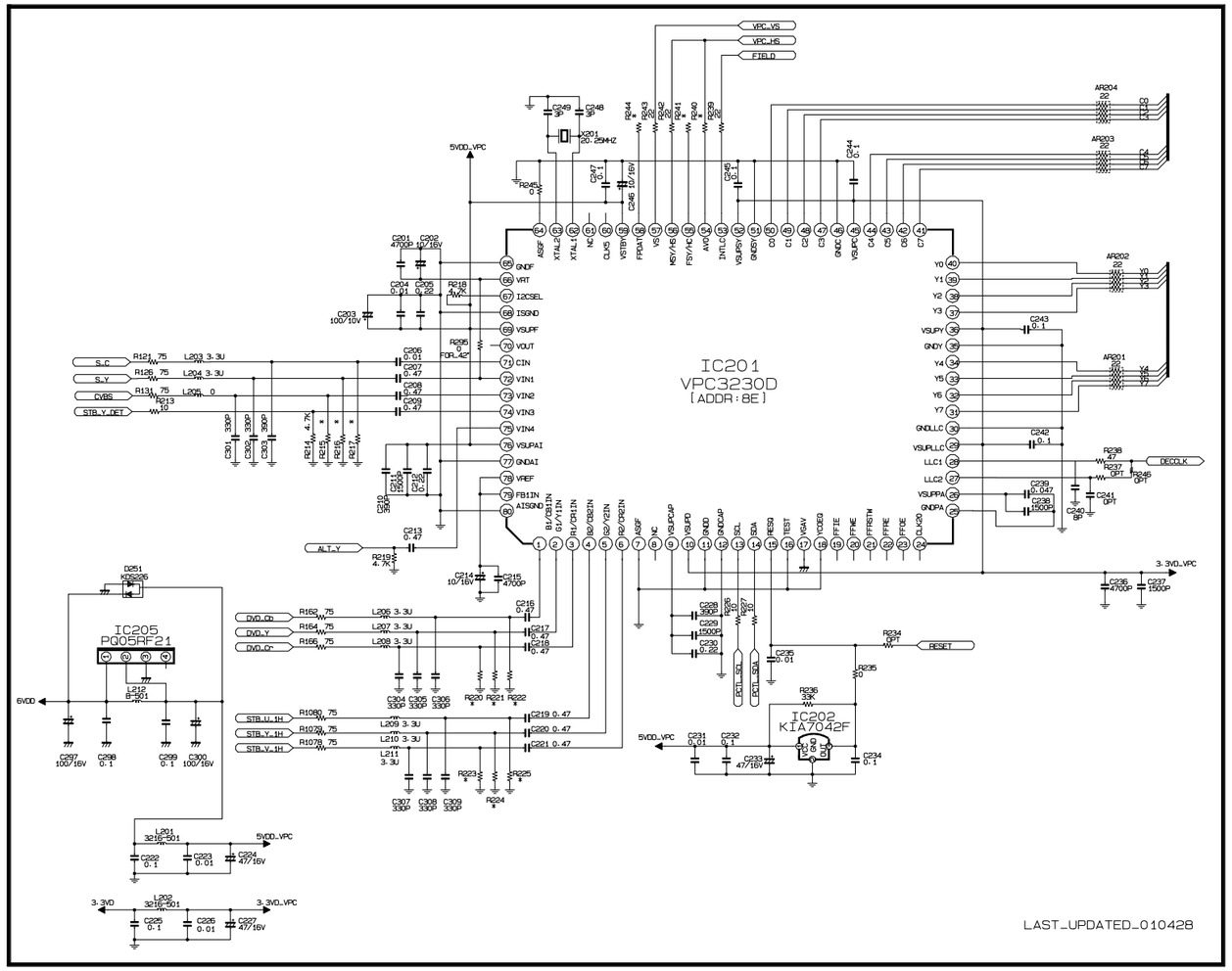
IC201
VPC3230D
[ADDR:8E]
IC205
P005RF21
IC202
KIA7042F
LAST_UPDATED_010428

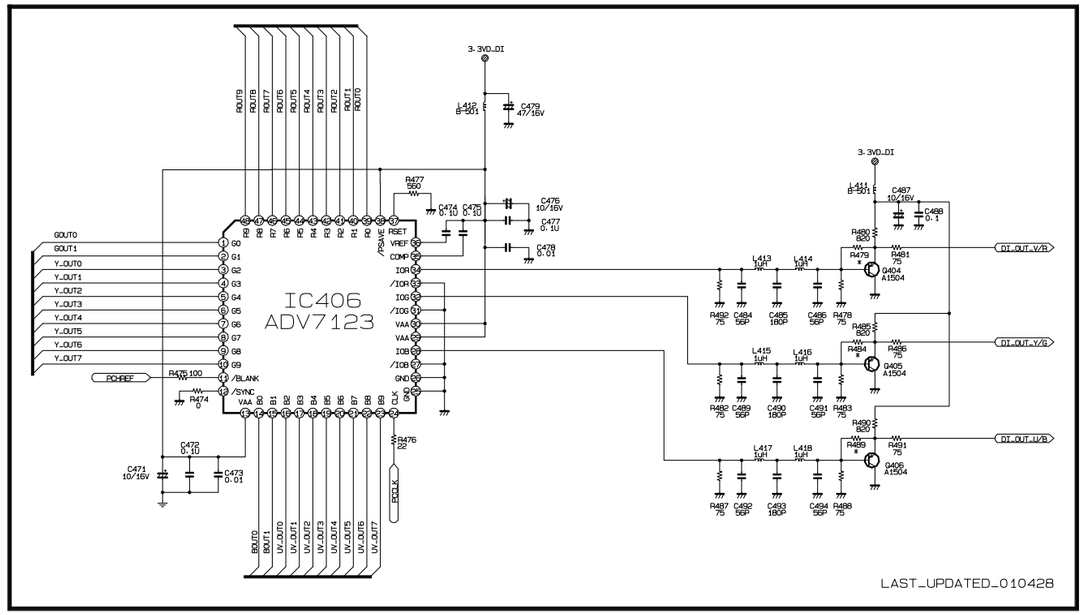
IC406
ADV7123
LAST_UPDATED_010428

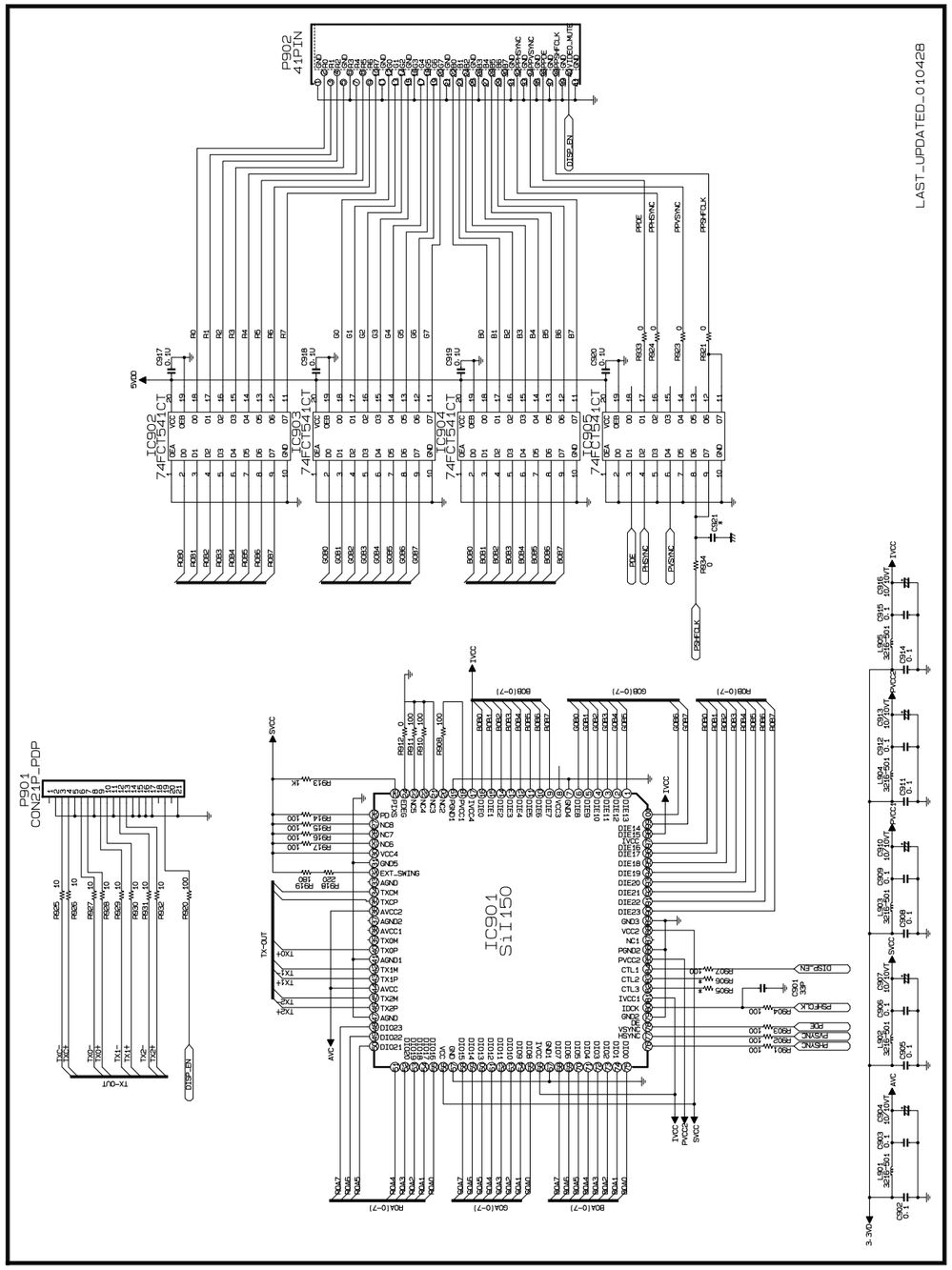
P902
41PIN
IC902
74FCT541CT
IC903
74FCT541CT
IC904
74FCT541CT
P901
CON21P_PDP
IC901
SiI150
LAST_UPDATED_010428

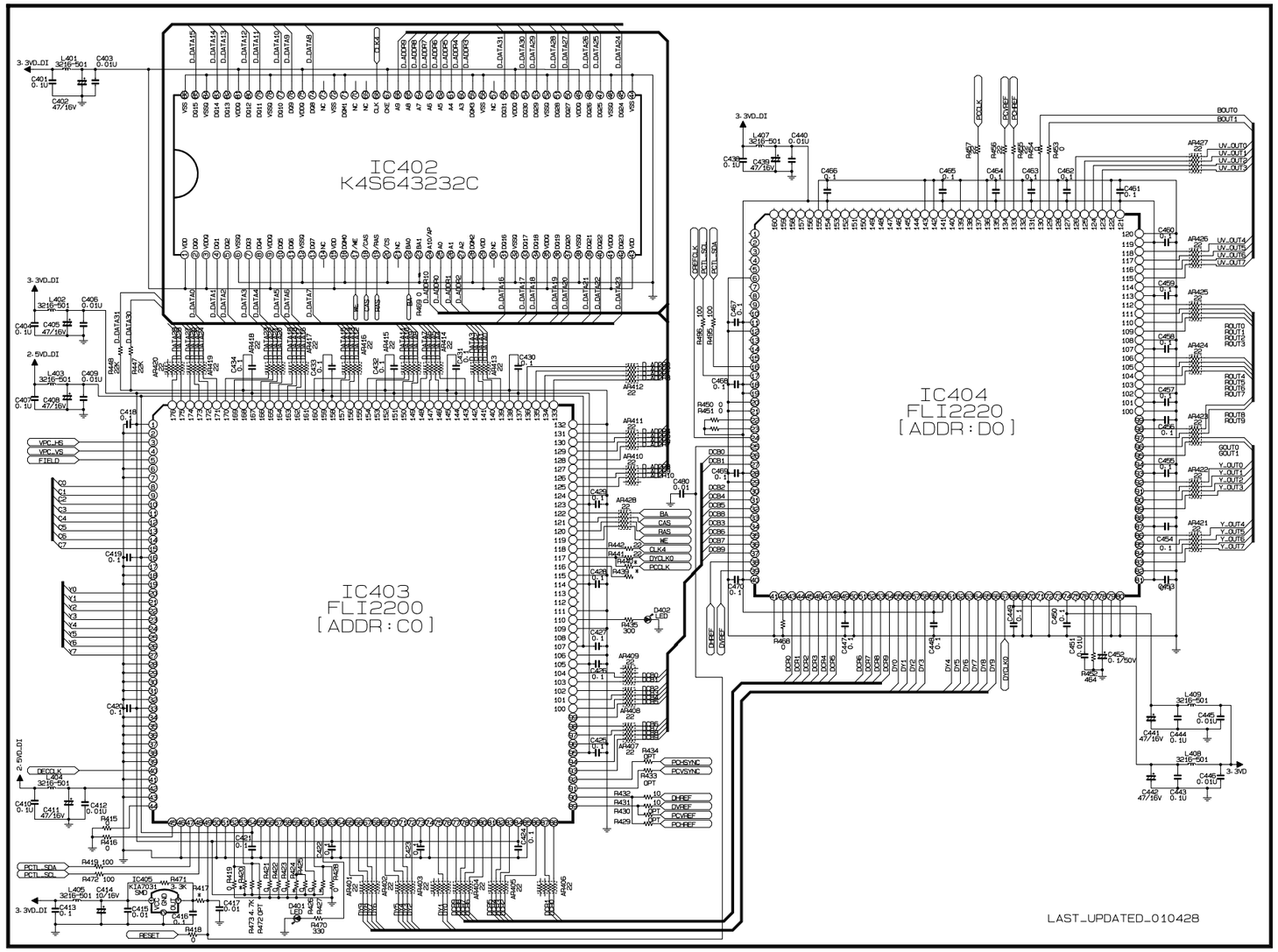
IC402
K4S643232C
IC404
FLI2220
[ADDR:D0]
IC403
FLI2200
[ADDR:C0]
LAST_UPDATED_010428

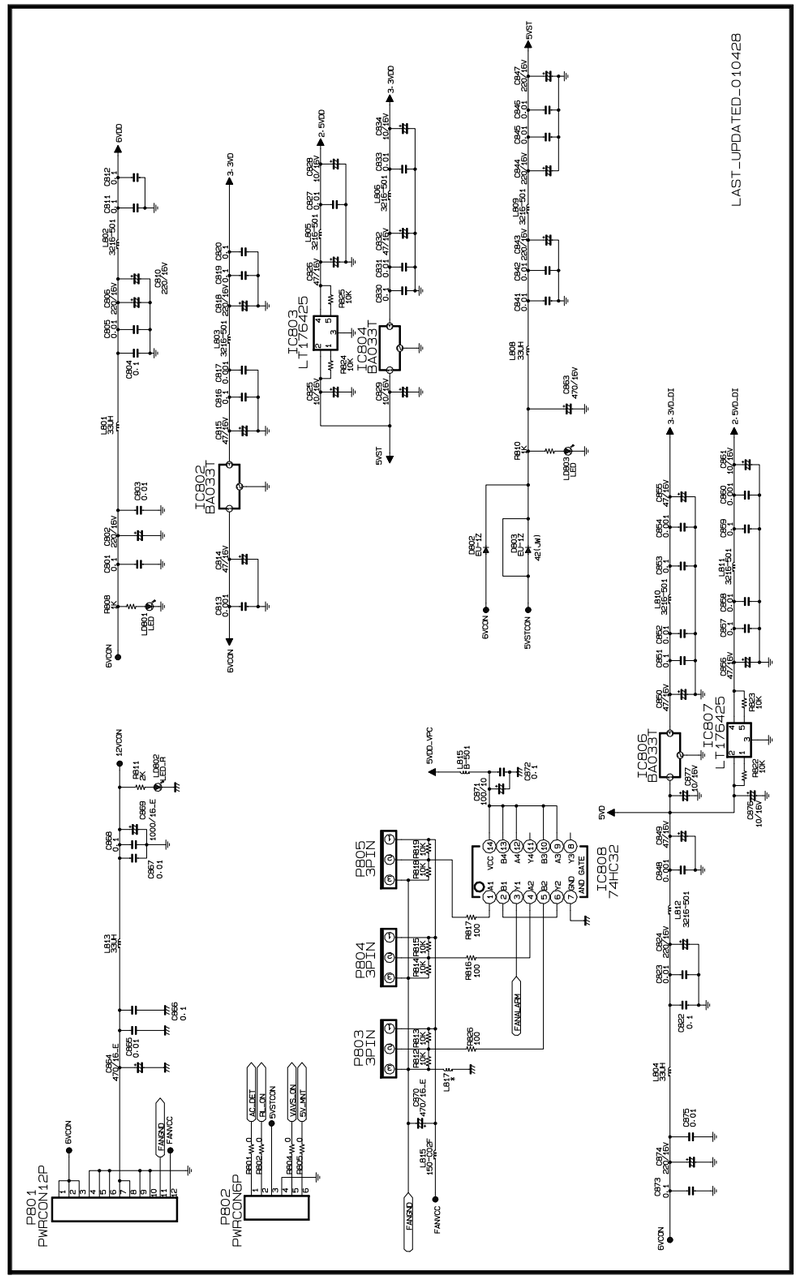
LAST_UPDATED_010428
PB01
PWRCON12P
PB02
PWRCON6P
PB03
3PIN
PB04
3PIN
PB05
3PIN
IC808
74HC32
IC802
BA033T
IC803
LT1175425
IC804
BA033T
IC806
BA033T
IC807
LT1175425

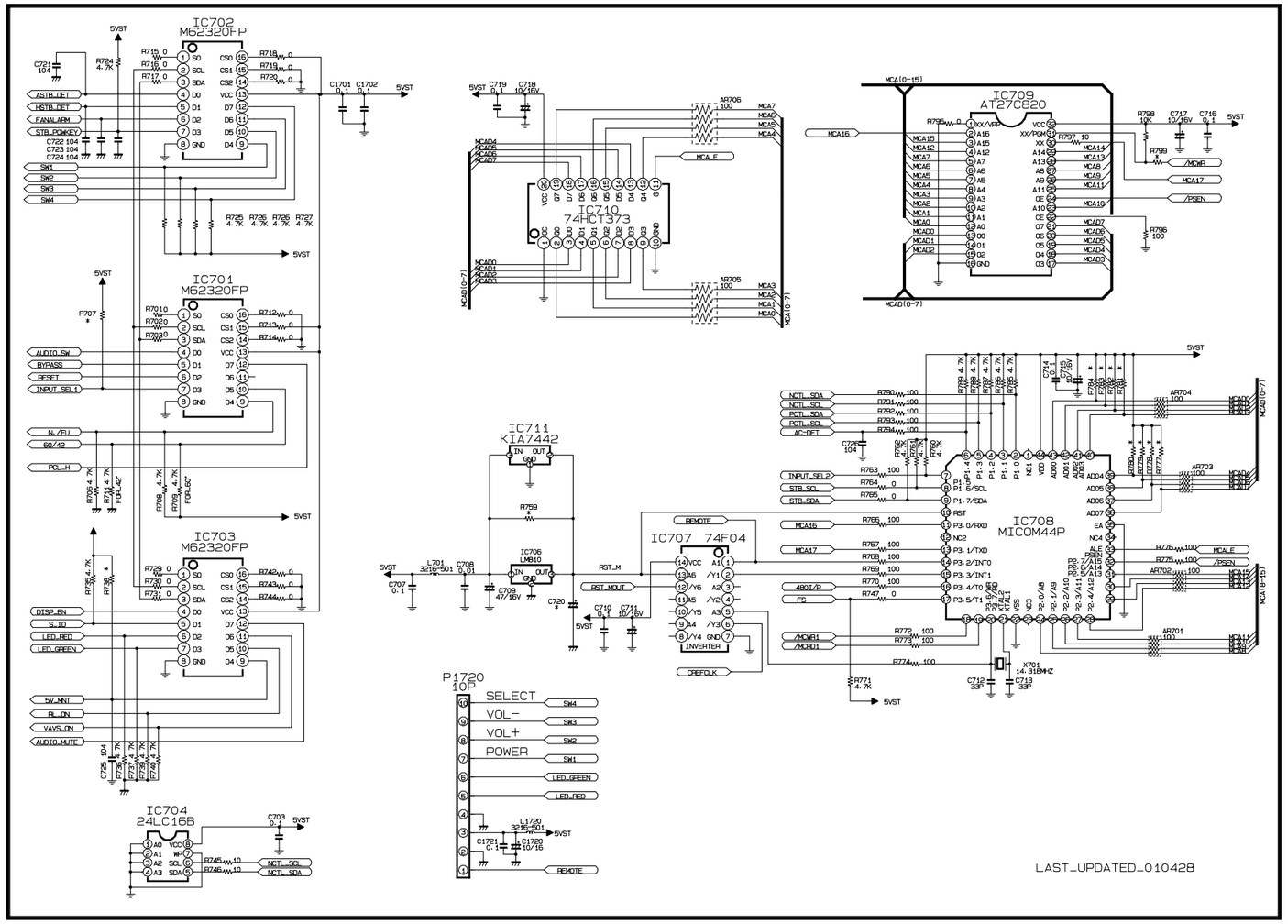
IC702
M62320FP
IC701
M62320FP
IC703
M62320FP
IC704
24LC16B
IC709
AT27C820
IC710
74HCT373
IC711
KIA7442
IC707 74F04
IC708
MICOM44P
P1720
10P
SELECT
VOL−
VOL+
POWER
LAST_UPDATED_010428

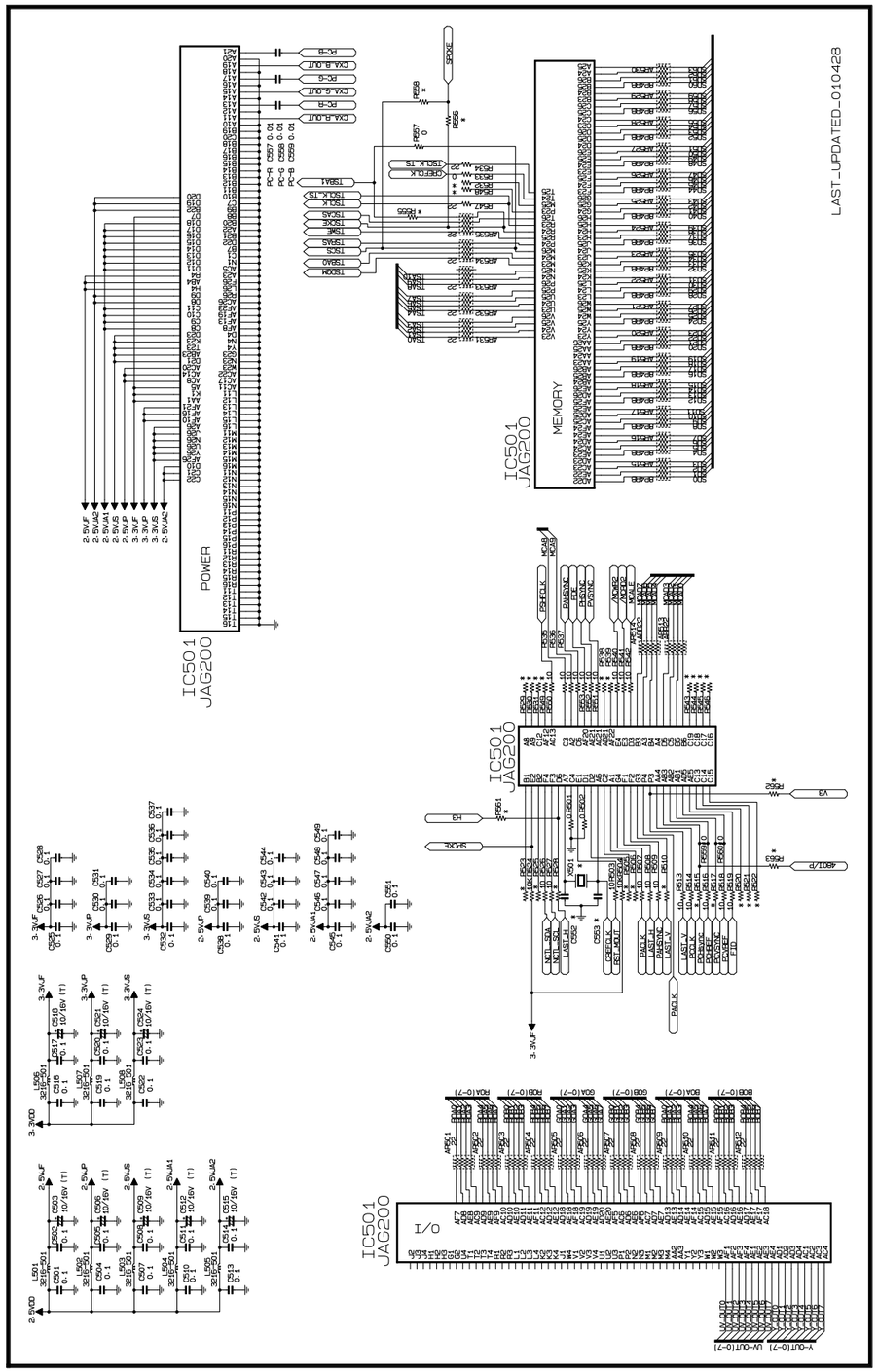
IC501
JAG200
POWER
MEMORY
I/O
LAST_UPDATED_010428

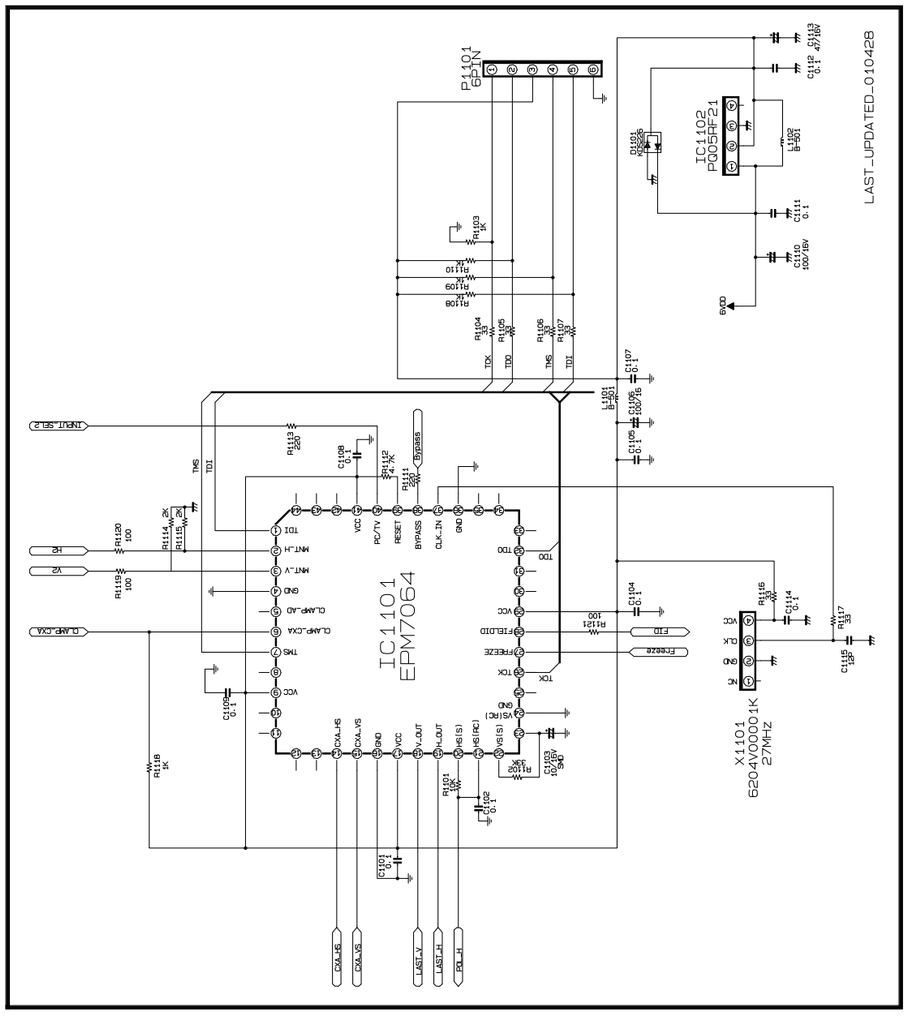
IC1101
EPM7064
P1101
6PIN
IC1102
PQ05RF21
X1101
6204V00001K
27MHZ
LAST_UPDATED_010428

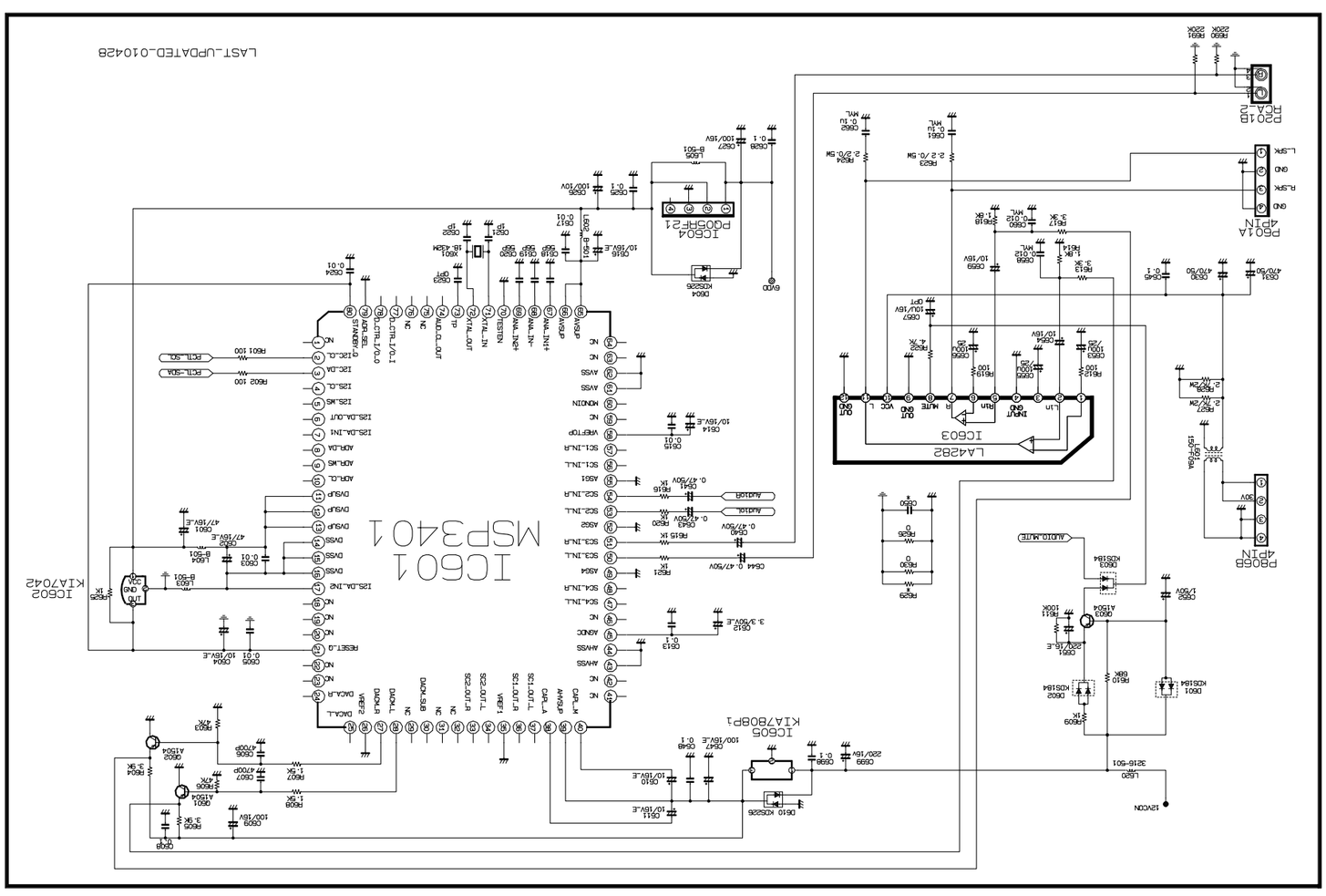
IC601
MSP3401
IC603
LA4282
IC604
PQ05RF21
IC605
KIA7808P1
IC602
KIA7042
P601A
4PIN
P608A
4PIN
P601B
PCA-12
LAST_UPDATED_010428

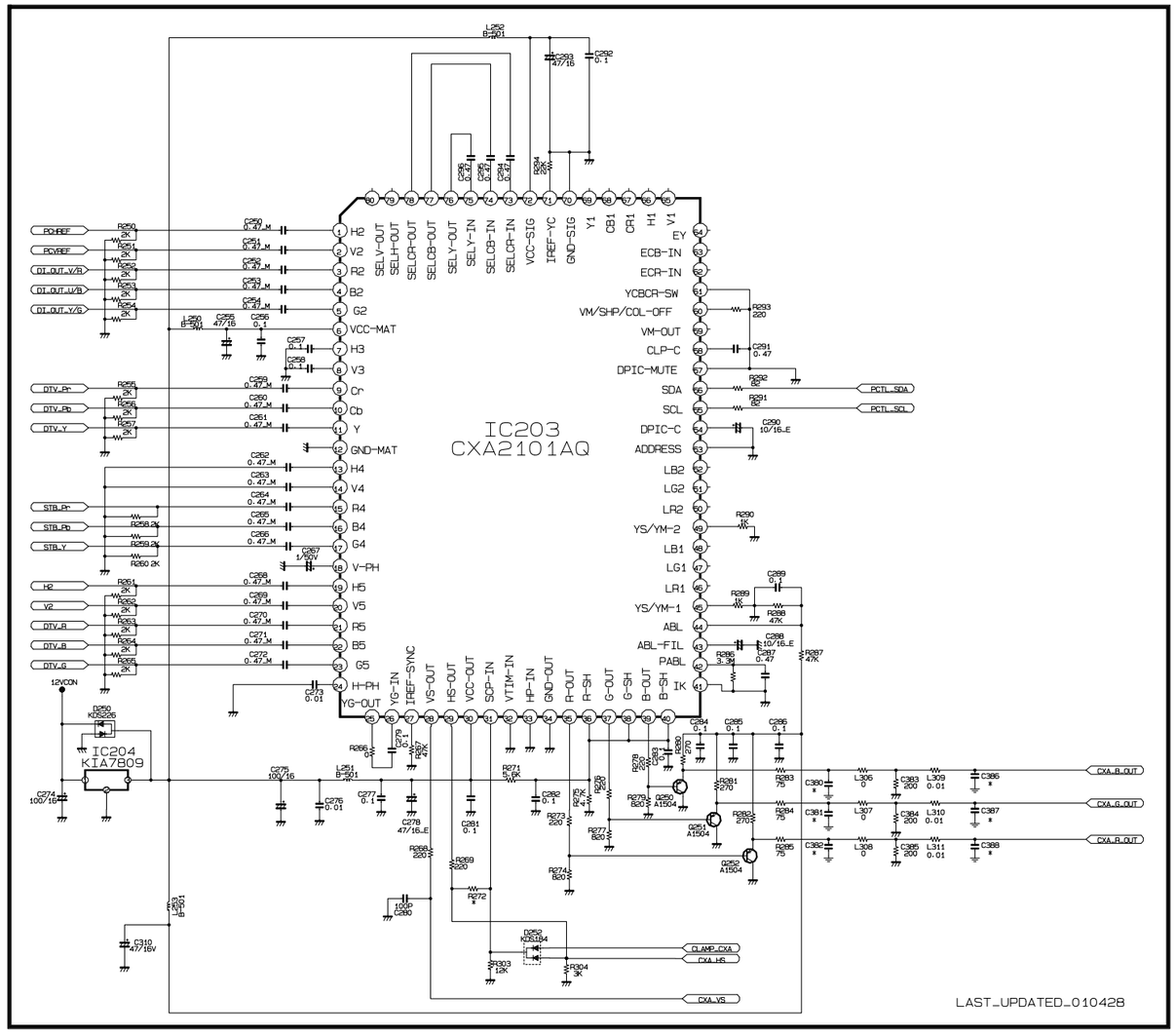
IC203
CXA2101AQ
IC204
KIA7809
LAST_UPDATED_010428

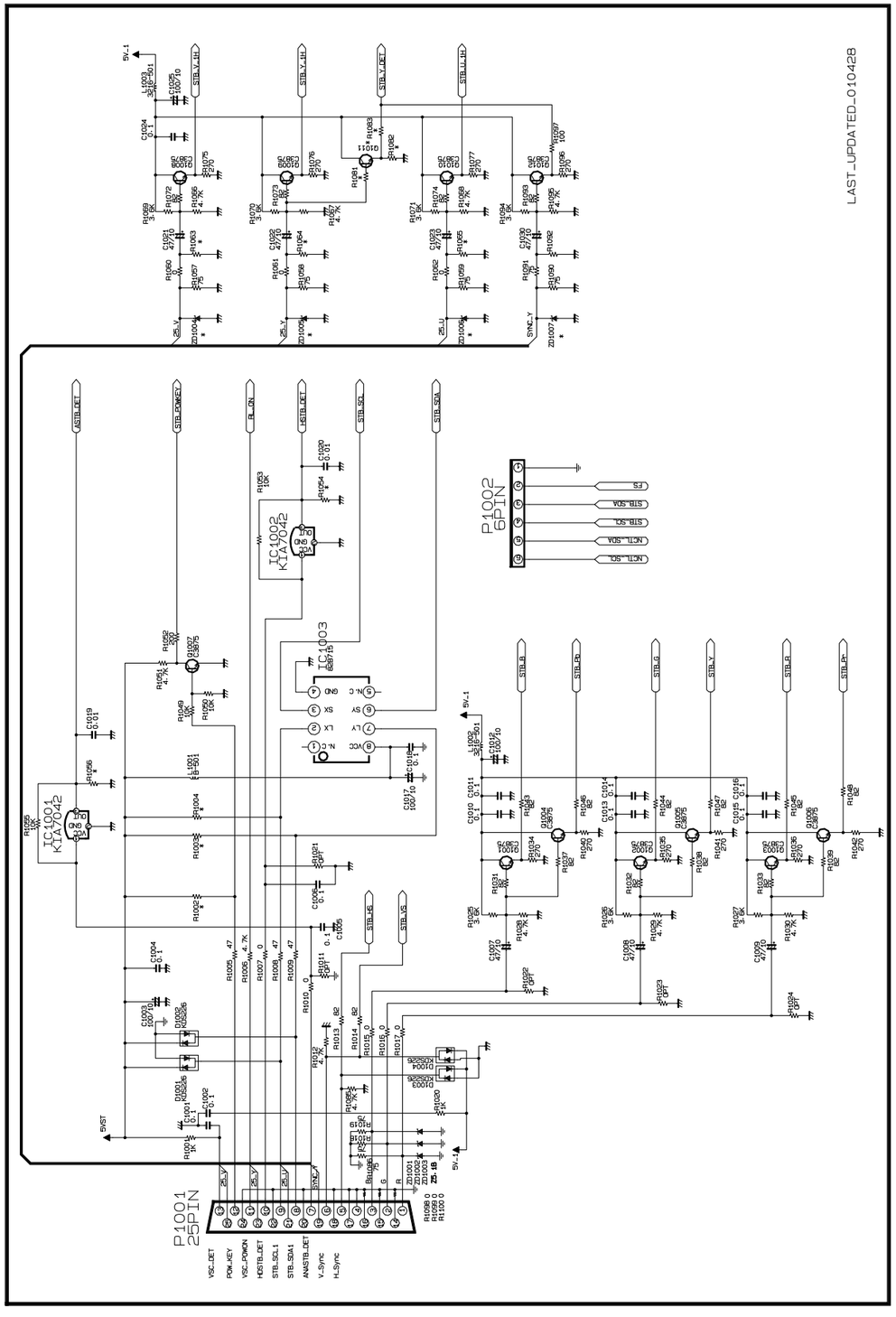
LAST_UPDATED_010428
P1002
6PIN
IC1002
KIA7042
IC1003
IC1001
KIA7042
P1001
25PIN

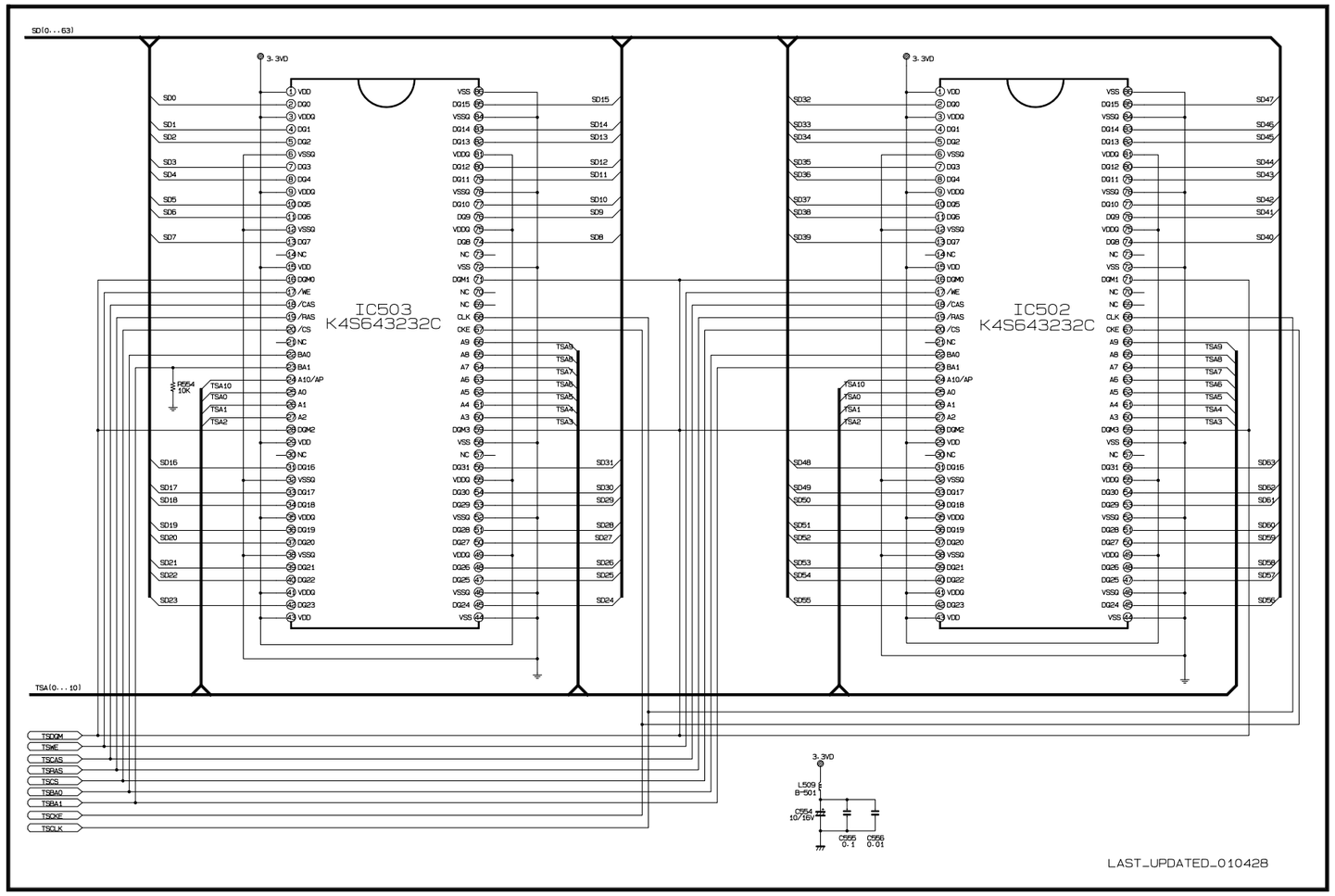
SD[0...63]
3.3VD
IC503
K4S643232C
IC502
K4S643232C
R554
10K
TSA[0...10]
TSDQM
TSWE
TSCAS
TSRAS
TSCS
TSBA0
TSBA1
TSCKE
TSCLK
L509
B-601
C554
10/16V
C555
0.1
C556
0.01
LAST_UPDATED_010428

LG Electronics Inc.

P/NO : 3828VD0070L

Aug.,2001
Printed in Korea